Fuji Electric

Innovating Energy Technology

FUJI SERVO SYSTEM

ALPHA5 Smart

ALPHA5 Smart

24C1-E-0010g

Middle Inertia Type GYB Series Servo Motor (Rated speed 3000r/min)

Voltage	Rated output	Motor Type (Standard)	Amplifier Type
Single or 3-phase 200V	0.2kW	GYB201D5-□□2（-B）	RYH201F5-VV2
	0.4kW	GYB401D5-□□2（-B）	RYH401F5-VV2
	0.75kW	GYB751D5-□□2（-B）	RYH751F5-VV2

NEW Middle Inertia Type GYH Series Servo Motor (Rated speed 2000r/min)

Voltage	Rated output	Motor Type (Standard)	Amplifier Type
3-phase 200V	1.0kW	GYH102C6-TC2(-B)	RYH751F5-VV2
	1.5kW	GYH152C6-TC2(-B)	RYH152F5-VV2
	2.0kW	GYH202C6-TC2(-B)	RYH152F5-VV2
	3.0kW	GYH302C6-TC2(-B)	RYH202F5-VV2
	4.0kW	GYH402C6-TC2(-B)	RYH302F5-VV2
	5.5kW	GYH552C6-TC2(-B)	RYH402F5-VV2
	7.0kW	GYH702C6-TC2(-B)	RYH502F5-VV2

Contents

Main Products/Combination table ____ 2
Features ____ 3
Application Example ____ 5
Product Family ____ 6
Model Codes ____ 7
Servo Amplifier Specification ____ 8
Connection Diagram ____ 9
Servo Motor Specifications ____ 10
Servo amplifier External Dimensions ____ 14
Servo Motor External Dimensions ____ 15
Optional shaft extension specifications [with key, tapped] ____ 19
Configuration Diagram/ Peripheral Equipment ____ 20
Options ____ 21
Model List ____ 23
Service Network ____ 25
Product Warranty ____ 26

ALPHA5 Smart

Feature 1 | Wide Range of Applications

With the new auto-tuning function, optimal tuning can be realized even for low-rigidity devices!!

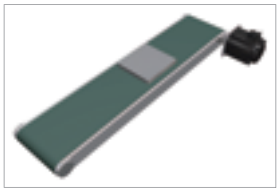
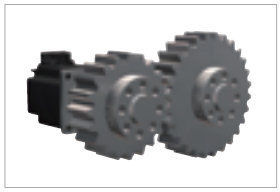
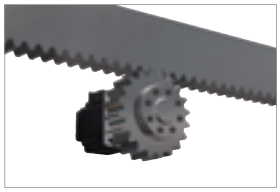

Easy adjustment even for long belt mechanisms, gears with considerable backlash, and rack and pinion mechanisms.

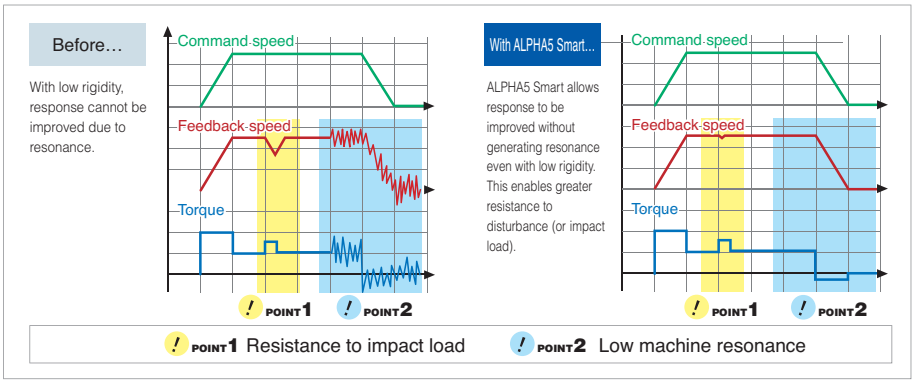

Feature 2 | Super Stability

Smooth, stable operation even with changes due to wear or variation* among devices.

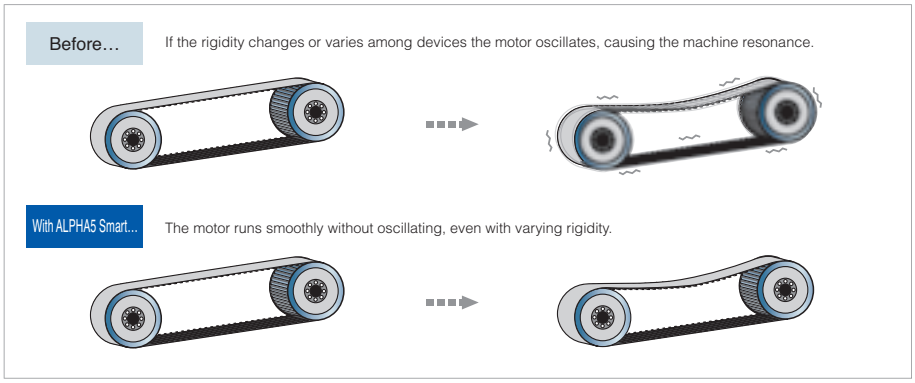

* Variations in device rigidity such as belt tension or parts.

Other Features

Smart Operation

New handy-sized portable servo operator makes the operation much smarter

Long-life design

Electrolytic capacitor 10years

Cooling fan 10years

* Operating conditions
- Ambient temperature: Average 30°C/year
- Load factor: Within 80%
- Operation rate: Within 20 hours/day

Easy ABS battery replacement

ABS backup battery can be mounted on front face of servo amplifier for easy replacement

Regulatory compliance

Global Compatibility.The standard model complies with CE marking, UL/cUL and TÜV.

* Some of the models are in the process to be certified.

RoHS Directive

Compliant with the European Restriction of Hazardous Substances (ROHS) Directive. The use of six hazardous substances has been reduced for a more environmentally-friendly servo system.
<Six hazardous materials>
Lead, mercury, cadmium,hexavalent chromium, polybrominated biphenyl (PBB), polybrominated diphenylether (PBDE)

Feature 3 | Smart Design

PTP positioning

Positioning function built in as standard

No external units or special equipment required for positioning

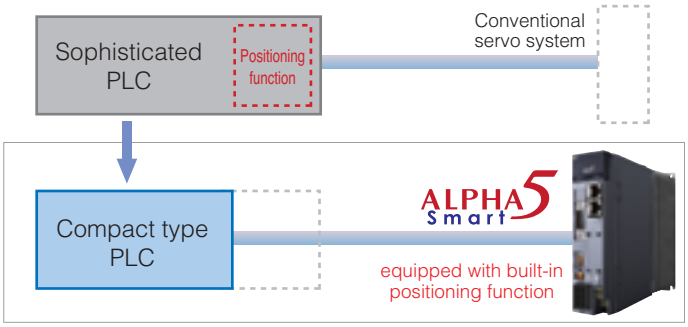

3-in1 functionality

Three operations via one unit:
- Positioning via Modbus-RTU communications (immediate value data)
- Positioning via Di/Do signal (positioning data 15 points*)
- Position, speed, and torque control via pulse/analog input

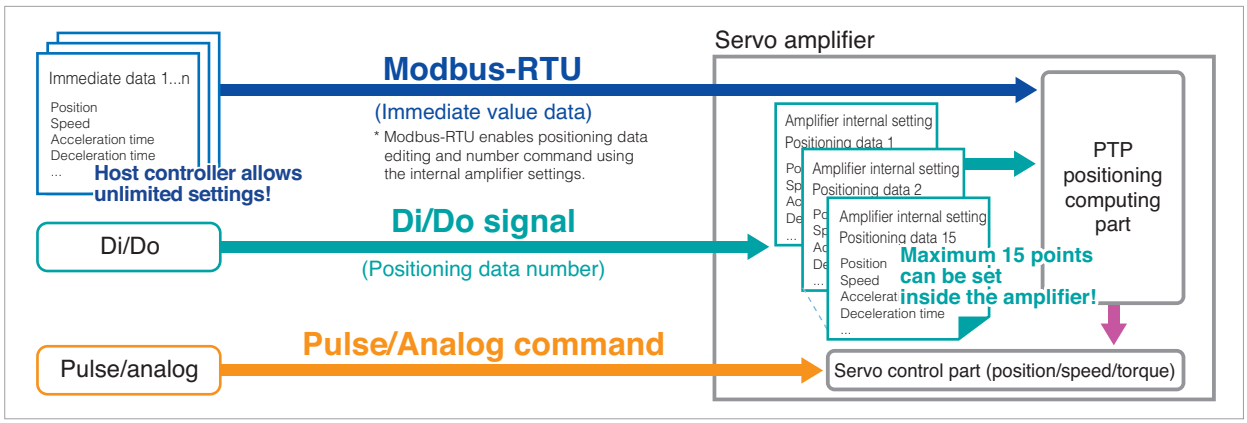

Simple operation via Modbus-RTU communications

Modbus-RTU communications enables PTP positioning, parameter editing, and the use of various monitors. Just connect an HMI, general-purpose PLC, or PC controller directly to the servo amplifier.

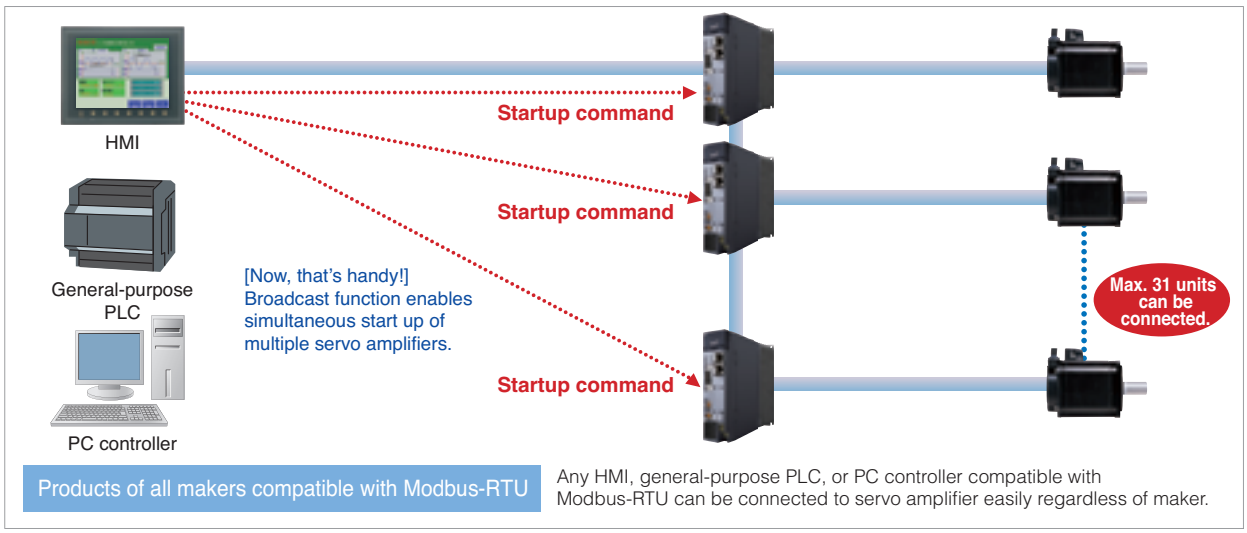

Packaging Machine

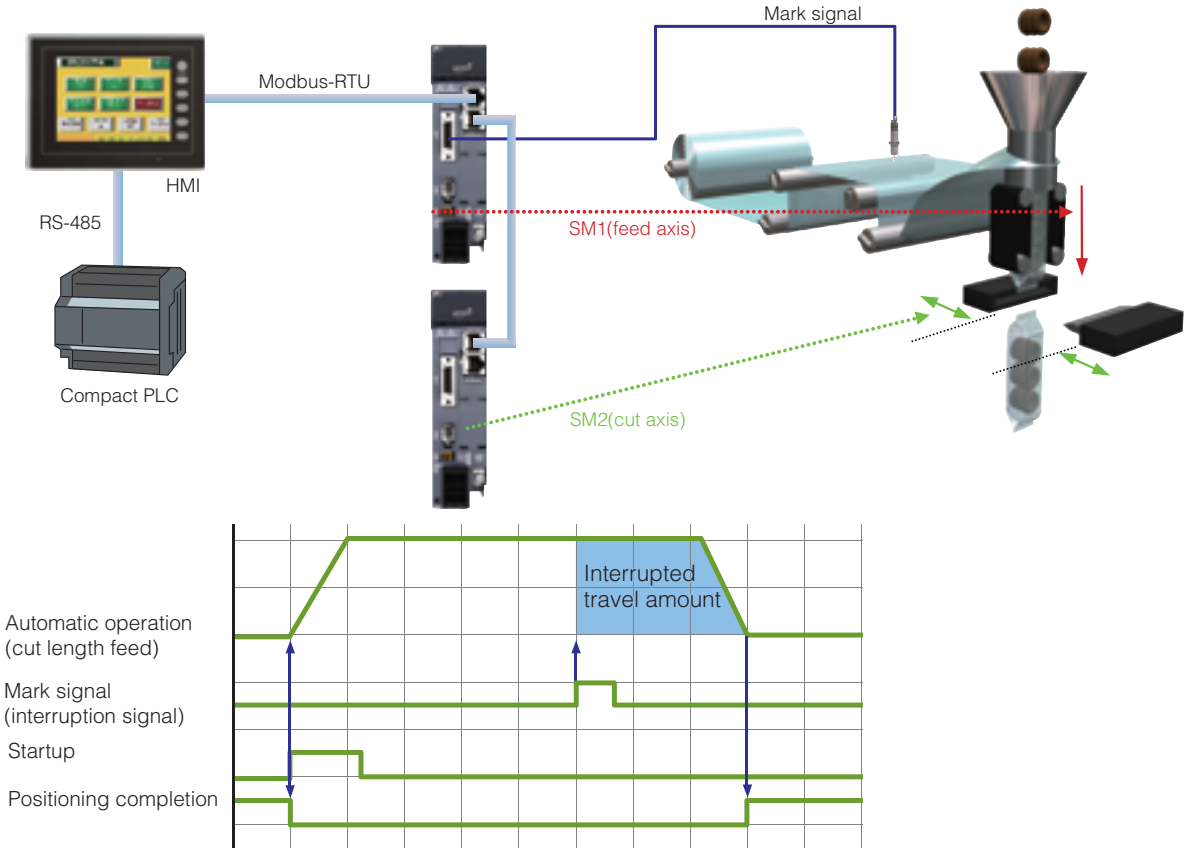

Features

1. Servo amplifier features a built-in positioning function

The servo amplifier's positioning data enables film feeding without the positioning controller.

2. Less wiring required

Wiring requires fewer man-hours as basic positioning is carried out via Modbus-RTU communications.

3. Interrupted positioning

The interrupted positioning function allows a specified amount of travel after the mark is detected for more precise mark operation.

Conveyor

Workpiece feeder, carrier, etc.

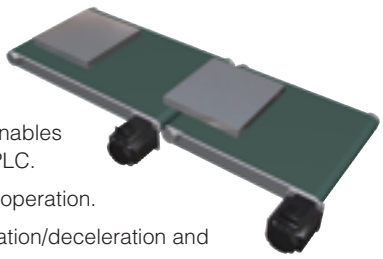

<Key Points>

- The positioning data enables positioning without a PLC.
- Enables simultaneous operation.
- Enables rapid acceleration/deceleration and high-speed operation.
- Enables high-accuracy positioning.
- High-tact operation mode allows high-frequency operation.

XY Table

Engraving machine, 2D positioning unit, etc.

<Key Points>

- The positioning data enables positioning without a PLC.
- Enables rapid acceleration/deceleration and high-speed operation.
- Enables high-accuracy positioning.
- Trace operation mode allows optimal operation.

Servo Amplifier / Motor

Inertia		Middle				Ultra-low
Applicable Motor / Servo Amplifier	Applicable motor output	GYB Motor 3000 [r/m] Brake: without (with)	GYH Motor 2000 [r/min] Brake: without (with)	GYG Motor 2000 [r/min] Brake: without (with)	GYG Motor 1500 [r/min] Brake: without (with)	GYS Motor 3000 [r/min] Brake: without (with)
RYH201F5-VV2	0.05kW					GYS500D5-□□2 (-B)
	0.1kW					GYS101D5-□□2 (-B)
	0.2kW	GYB201D5-□□2 (-B)				GYS201D5-□□2 (-B)
RYH401F5-VV2	0.4kW	GYB401D5-□□2 (-B)				GYS401D5-□□2 (-B)
RYH751F5-VV2	0.5kW			GYG501C5-□□2 (-B)	GYG501B5-□□2 (-B)	
	0.75kW	GYB751D5-□□2 (-B)		GYG751C5-□□2 (-B)		GYS751D5-□□2 (-B)
	1.0kW		GYH102C6-TC2 (-B)			
RYH152F5-VV2	0.85kW				GYG851B5-□□2 (-B)	
	1.0kW			GYG102C5-□□2 (-B)		GYS102D5-□□2 (-B)
	1.5kW		GYH152C6-TC2 (-B)	GYG152C5-□□2 (-B)		GYS152D5-□□2 (-B)
	2.0kW		GYH202C6-TC2 (-B)			
RYH202F5-VV2	1.3kW				GYG132B5-□□2 (-B)	
	2.0kW			GYG202C5-□□2 (-B)		GYS202D5-□□2 (-B)
	3.0kW		GYH302C6-TC2 (-B)			
RYH302F5-VV2	3.0kW					GYS302D5-□□2 (-B)
	4.0kW		GYH402C6-TC2 (-B)			
RYH402F5-VV2	4.0kW					GYS402D5-□□2 (-B)
	5.5kW		GYH552C6-TC2 (-B)			
RYH502F5-VV2	5.0kW					GYS502D5-□□2 (-B)
	7.0kW		GYH702C6-TC2 (-B)			

ALPHA5 Smart

Servo Amplifier

RYH 201 F 5 - V V 2

Code	[Basic Type]
RYH	ALPHA5 Smart series

Code	[Applicable Motor Output]
201	20×10^1 = 200W,100W,50W
401	40×10^1 = 400W
751	75×10^1 = 750W,500W
152	15×10^2 = 1.5kW,1.0kW,850W
202	20×102 = 2.0kW
302	30×10^2 = 3.0kW,4.0kW
402	40×10^2 = 4.0kW,5.5kW
502	50×10^2 = 5.0kW,7.0kW

Code	[Series]
F	1500 to 3000r/min series

Code	[Input voltage]
2	3-phase 200V

Code	[Upper interface]
V	General-purpose interface (pulse, analog voltage)

Code	[Major functions]
V	Position, speed and torque control

Code	[Development Order]
5	5

Servo Motor

GYB 201 D 5 - R C 2 - B

Code	[Basic Type]
GYB	Middle Inertia Type
GYH	Middle Inertia Type
GYG	Middle Inertia Type
GYS	Ultra-low Inertia Type

Code	[Rated Output]
500	50×10^0 = 50W
101	10×10^1 = 100W
201	20×10^1 = 200W
401	40×10^1 = 400W
751	75×10^1 = 750W
851	85×10^1 = 850W
102	10×10^2 = 1.0kW
132	13×10^2 = 1.3kW
152	15×10^2 = 1.5kW
202	20×10^2 = 2.0kW
302	30×10^2 = 3.0kW
402	40×10^2 = 4.0kW
502	50×10^2 = 5.0kW
552	55×10^2 = 5.5kW
702	70×10^2 = 7.0kW

Code	[Rated Speed]
D	3000r/min series
C	2000r/min series
B	1500r/min series

Code	[Development Order]
5	5
6	6

Code	[Brake]
Blank	Without
B	With

Code	[Input voltage]
2	3-phase 200V

Code	[Oil seal/shaft]
A	Without oil seal, straight shaft, with key
B	Without oil seal, straight shaft, without key
C	Without oil seal, straight shaft, with key, tapped
E	With oil seal, straight shaft, with key
F	With oil seal, straight shaft, without key
G	With oil seal, straight shaft, with key, tapped

Code	[Encoder]
H	ABS/INC(18bit)*
R	INC(20bit)
T	INC(17bit)

* Battery is necessary for ABS type.
Note: Please see the model list on page 16, 17 for the combination detail.

Common specifications

Applicable motor rated speed		3000r/min											2000r/min										1500r/min		
Applicable motor output [kW]		0.05	0.1	0.2	0.4	0.75	1.0	1.5	2.0	3.0	4.0	5.0	0.5	0.75	1.0	1.5	2.0(GYH)	2.0(GYG)	3.0	4.0	5.5	7.0	0.5	0.85	1.3
Amplifier type	RYH F5-VV2	201			401	751	152		202	302	402	502	751		152			202		302	402	502	751	152	202
Outer frame number		1a			1b	2a	2b		3a	3b	4a	4b	2a		2b			3a		3b	4a	4b	2a	2b	3a
Mass [kg]		0.8				1.2	1.3		2.2		3.6		1.2		1.3			2.2			3.6		1.2	1.3	2.2
Protective construction / cooling		Open / natural cooling				Open / mechanical cooling																			
Power supply	Phase	Single-phase, 3-phase				3-phase							Single-phase, 3-phase		3-phase								Single-phase, 3-phase	3-phase	
	Voltage / frequency	200 to 240VAC 50/60Hz																							
	Allowable voltage fluctuation	3-phase : 170 to 264 VAC, Single-phase : 180 to 264 VAC																							
Control system		Fully-digital sinusoidal PWM drive																							
Max voltage for regenerative resistance [W]	Built-in resistor	–				20			30		60		20					30			60		20		30
	External resistor	17				50			260		300		50					260			300		50		260
Feedback		INC 20bit/rev, ABS/INC 18bit/rev																							
Overload capability		300% / 3 sec.																							
Speed fluctuation ratio*	Load fluctuation	Within ± 0.01% (load fluctuation 0 to 100% at rated operation speed)																							
	Power supply fluctuation	0% (power supply fluctuation -10 to +10% at rated operation speed)																							
	Temperature fluctuation	Within ± 0.2% (25 ± 10°C at rated operation speed)																							
Capability and function VV type	Speed control	Closed loop control with speed adjuster, acceleration/deceleration time setting, manual feed rate/max. rotation speed, speed command zero clamp, etc.																							
	Number of position data sets	15-point (position, speed, acceleration/deceleration time setting, timer, M code and various statuses)																							
	Positon control	Closed loop control with position adjuster, electronic gear, output pulse setting, feed forward, homing, interrupt positioning, auto startup, etc.																							
	Torque control	Closed loop control with current adjuster (proportional open loop control of current and torque), torque limit, speed limit at torque control, etc.																							
	Accessory functions	Easy tuning, profile operation, sequence test mode, auto tuning, auto notch filter, vibration suppressing online learning, etc.																							
Protective function (Alarm display)		Over Current (oc1, oc2), Over Speed (oS), High Voltage (Hu), Encoder Trouble (Et1, Et2), Circuit Trouble (ct), Data Error (dE), Combination Error (cE), Resistor Tr Heat (tH), Encoder Communication Error (Ec), Cont (CONTrol signal) Error (ctE), Over Load (oL1, oL2), Power Low Voltage (LuP), Resistor Heat (rH1, rH2, rH3), Over Flow (oF), Amp Heat (AH), Encoder Heat (EH), Absolute Data Lost (dL1, dL2, dL3), Absolute Data Over Flow (AF), Initial Error (iE)																							
Operation and display section of main body(keypad)		4-digit alphanumeric display with 7-segment LED 4 operation switches (MODE, SET, UP and DOWN)																							
Working conditions	Installation place	Indoors at altitude ≤ 1000m, free from dust, corrosive gases and direct sunlight In case of compliance with CE marking: pollution degree 2, over voltage category III																							
	Temperature / humidity	-10 to 55°C/10 to 90%RH (without condensation)																							
	Vibration / shock resistance	Vibration resistance: 3mm: 2 to 9Hz or less, 9.8m/s²: 9 to 20Hz or less, 2m/s²: 20 to 55Hz or less, 1m/s²: 55 to 200Hz or less Shock resistance: 19.6m/s² (2G)																							
Standards		UL/cUL (UL508c), CE marking (low voltage directive EN61800-5-1), RoHS directive (Some of the models are in the process to be certisfied.)																							

*This value represents the average value of the speed fluctuation that is generated from load fluctuation, power supply fluctuation, and temperature fluctuation as the percentage to the rated rotation speed.

Interface Specifications

Terminal name	Symbol	Specifications
Pulse input	CA,*CA CB,*CB	Differential input: max. input frequency ≤ 1.0MHz Open collector input: max. input frequency ≤ 200kHz (in case of signals at 90-degree phase difference, the above relationship is true for the four-fold frequency.) Pulse format Command pulse/Command direction Forward/Reverse pulse Two signals at 90-degree phase difference } Select one of these formats with a parameter setting.
	PPI	Pull-up power input at open collector input (24VDC ± 5%)
Pulse output	FFA,*FFA FFB,*FFB	Differential output: max. output frequency ≤ 1MHz Two signals at 90-degree phase difference Pulse output count setting n (pulses/rev): 16 ≤ n ≤ 262144
	FFZ,*FFZ	Differential output: 1 pulse/rev
	FZ	Open collector output: 1 pulse/rev
	M5	Reference potential (0V)
Analog monitor voltage output	MON1 MON2	0V to ± 10VDC Resolution: 14bits / ± full scale The output data depends on internal parameter.
	M5	Reference potential (0V)
Common for sequence I/O	COMIN	Common for sequence input signal
	COMOUT	Common for sequence output signal
Sequence input signal	CONT1 to CONT5	12VDC-10% to 24VDC+10% Current consumption 8mA (per contact; used at circuit voltage of 12 to 24VDC) Function of each signal depends on parameter setting Compatible with both sink and source input methods
	COMIN	Reference potential
Sequence output signal	OUT1 to OUT3	30VDC / 50mA (max.) Function of each signal depends on parameter setting Compatible with both sink and source output methods
	COMOUT	Reference potential
Analog voltage input (for speed and torque control)	VREF	Speed command voltage input Input range: from -10 to 0 to -10V, input impedance 20kΩ Resolution: 15 bits / ± full scale
	TREF	Torque command voltage input Input range: from -10 to 0 to +10V, input impedance 20kΩ Resolution: 14 bits / ± full scale
	M5	Reference potential (0V)

Item		Specifications
Command interface	Positioning function	RS-485 (Modbus-RTU), Di/Do
	Position control	Pulse input
	Speed control	Analog voltage input
	Torque control	Analog voltage input
Communication interface		Two RS-485 ports (for parameter editing and monitor) Fuji's original protocol Modbus-RTU 9600/19200/38400/115200 bps, connection of max. 31 units

VV Connection Diagram

Sample: frame 1

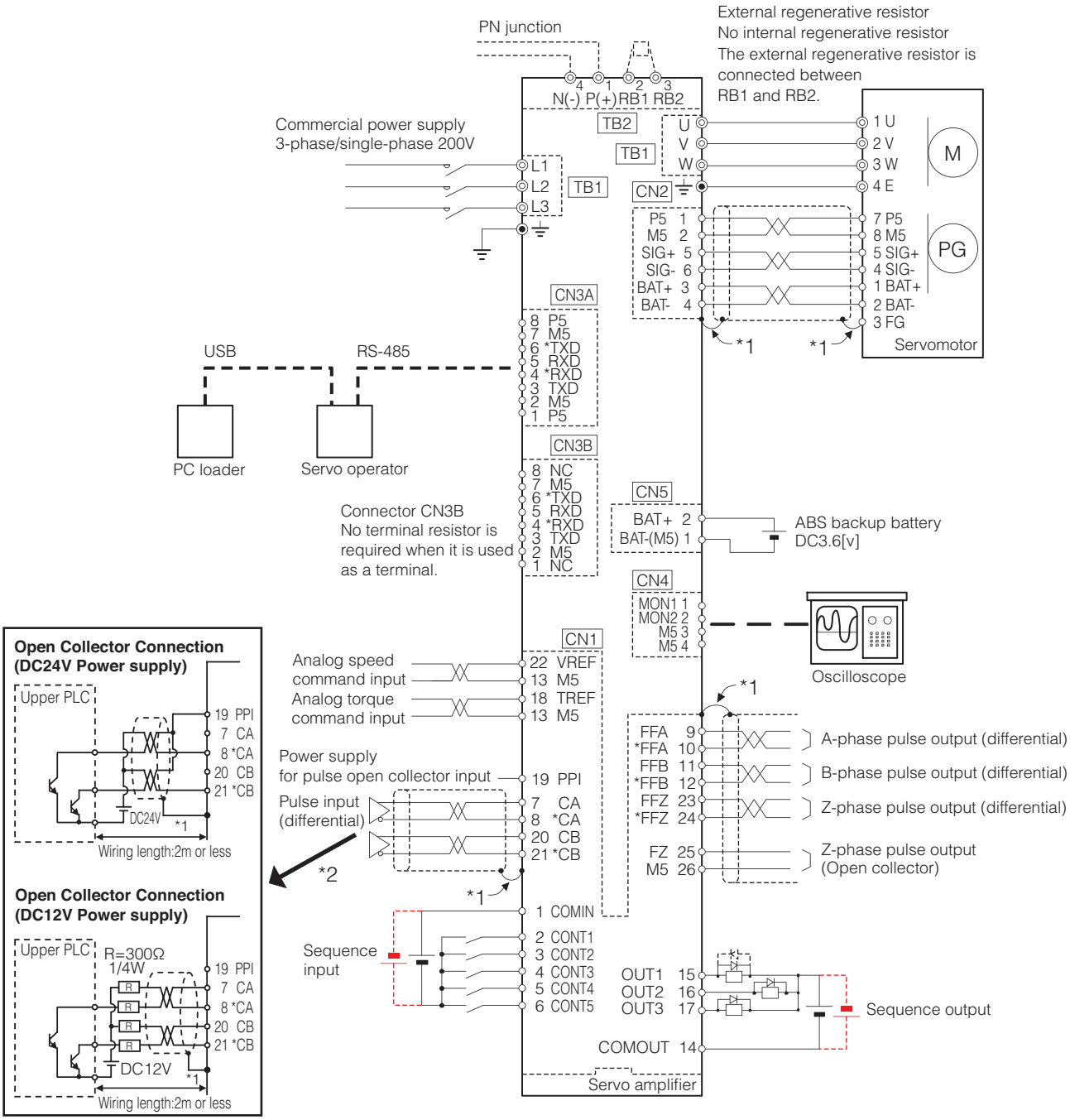

*1: Connect the shield to the connector shell of CN1 and CN2. The connector shell is at the ground potential.

*2: When connecting the open collector, the wiring length should be 2 m or less.

Caution	The diagram shown above is given as a reference for model selection. When actually using the selected servo system, make wiring connections according to the connection diagram and instructions described in the user's manual.

Middle Inertia GYB Motor [3000r/min]

Standard specifications

Motor type (-B) indicates the brake-incorporated type.	GYB201 D5- 2 (-B)	GYB401 D5- 2 (-B)	GYB751 D5- 2 (-B)
Rated output [kW]	0.2	0.4	0.75
Rated torque [N · m]	0.637	1.27	2.39
Rated speed [r/min]	3000		
Max. speed [r/min]	6000*1		
Max. torque [N · m]	1.91	3.82	7.17
Inertia [kg · m²] ( ) indicates brake-incorporated type.	0.24×10^{-4} (0.29×10^{-4})	0.42×10^{-4} (0.46×10^{-4})	1.43×10^{-4} (1.61×10^{-4})
Rated current [A]	1.5	2.7	5.2
Max. current [A]	4.5	8.1	15.6
Winding insulation class	Class B		
Degree of enclosure protection	Totally enclosed, self-cooled (IP 67. excluding the shaft-through)*2		
Terminals (motor)	0.3m cable		
Terminals (encoder)	0.3m cable		
Overheat protection	Not provided (The servo amplifier detects temperature.)		
Mounting method	By securing motor flange IMB5 (L51), IMV1 (L52), IMV3 (L53)		
Encoder	18-bit serial encoder (absolute/incremental), 20-bit serial encoder (incremental)		
Vibration level	V5 or below		
Installation place, altitude and environment	For indoor use (free from direct sunlight), 1000m or below, locations without corrosive and flamable gases, oil mist and dust		
Ambient temperature, humidity	-10 to +40°C, within 90% RH (without condensation)		
Vibration resistance [m/s²]	49		
Mass [kg] ( ) indicates brake-incorporated type.	1.0 (1.5)	1.5 (2.1)	3.0 (3.9)
Compliance with standards	UL/cUL (UL508c) (Some models are in the process to be certified), CE marking (low power directive EN61800-5-1), RoHS directive.		

*1: The max. speed of 5000r/min can be reached by using it with Fuji's gear head
*2: Protection degree IP67 is initial value

Brake specifications (motor equipped with a brake)

Motor type	GYB201 D5- 2-B	GYB401 D5- 2-B	GYB751 D5- 2-B
Static friction torque [N · m]	1.27		2.45
Rated DC voltage [V]	DC24±10%		
Attraction time [ms]	40		60
Release time [ms]	20		25
Power consumption [W]	7.2 (at 20 °C)		8.5 (at 20 °C)

Torque characteristics diagrams (at 3-phase 200 [V] or single-phase 230 [V] source voltage)

GYB201D5-□□2	GYB401D5-□□2	GYB751D5-□□2
0.2kW	**0.4kW**	**0.75kW**

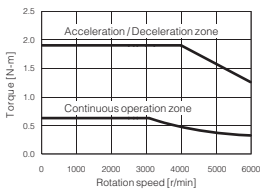

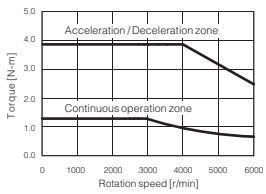

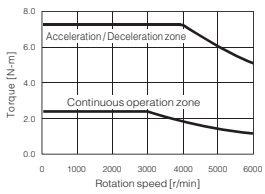

These characteristics indicate typical values of each servomotor combined with the corresponding servo amplifier RYH series.
The rated torque indicates the value obtained when the servo amplifier is installed to the following aluminum heat sink.

- Model GYB201, 401 : 250 × 250 × 6 [mm]
- Model GYB751 : 300 × 300 × 6 [mm]

Middle Inertia GYH Motor [2000r/min]

Standard specifications

Motor type (-B) indicates the brake-incorporated type.	GYH102 C6-T 2 (-B)	GYH152 C6-T 2 (-B)	GYH202 C6-T 2 (-B)	GYH302 C6-T 2 (-B)	GYH402 C6-T 2 (-B)	GYH552 C6-T 2 (-B)	GYH702 C6-T 2 (-B)
Rated output [kW]	1.0	1.5	2.0	3.0	4.0	5.5	7.0
Rated torque [N · m]	4.77	7.16	9.55	14.32	19.10	26.26	33.42
Rated speed [r/min]	2000						
Max. speed [r/min]	2500						
Max. torque [N · m]	14.3	21.4	28.6	42.9	47.7	65.6	83.5
Inertia [kg · m²]	6.26×10^{-4}	8.88×10^{-4}	12.14×10^{-4}	17.92×10^{-4}	39.99×10^{-4}	51.44×10^{-4}	63.52×10^{-4}
( ) indicates brake-incorporated type.	(6.96×10^{-4})	(9.58×10^{-4})	(12.84×10^{-4})	(18.62×10^{-4})	(40.80×10^{-4})	(52.31×10^{-4})	(67.36×10^{-4})
Rated current [A]	5.1	7.3	9	13.7	16	22.5	29
Max. current [A]	15.3	21.9	27	41.1	40.8	57.4	74.0
Winding insulation class	Class F						
Degree of enclosure protection	Totally enclosed, self-cooled (IP 67. excluding the shaft-through)*2						
Terminals (motor)	Cannon connector						
Terminals (encoder)	Cannon connector						
Overheat protection	Not provided (The servo amplifier detects temperature.)						
Mounting method	By securing motor flange IMB5 (L51), IMV1 (L52), IMV3 (L53)						
Encoder	17-bit serial encoder (incremental)						
Vibration level	V15 or below						
Installation place, altitude and environment	For indoor use (free from direct sunlight), 1000m or below, locations without corrosive and flamable gases, oil mist and dust						
Ambient temperature, humidity	0 to +40°C (there should be no freezing), within 90% RH (without condensation)						
Vibration resistance [m/s²]	19.6						
Mass [kg]	6.5	8.1	10.2	13.9	19.5	26.2	30.0
( ) indicates brake-incorporated type.	(8.1)	(9.7)	(11.8)	(15.5)	(23.0)	(30.0)	(34.8)

*1 The load inertia ratio to the inertia of servo motor. If the moment of load inertia ratio value exceeds the list value, please contact us.
*2 If the motor is used in the environment rated to IP67 protection degree, use the wiring connector suitable for the protection degree.

Brake specifications (motor equipped with a brake)

Motor type	GYH102 C6-T 2 (-B)	GYH152 C6-T 2 (-B)	GYH202 C6-T 2 (-B)	GYH302 C6-T 2 (-B)	GYH402 C6-T 2 (-B)	GYH552 C6-T 2 (-B)	GYH702 C6-T 2 (-B)
Static friction torque [N · m]	20				30		50
Rated DC voltage [V]	DC24±10%				DC24±5%		
Attraction time [ms]	100				110		150
Release time [ms]	27				25		40
Power consumption [W]	19.5 (at 20°C)				23 (at 20°C)		27 (at 20°C)

Torque characteristics diagrams (at 3-phase 200 [V] source voltage)

GYH102C6-T□2	GYH152C6-T□2	GYH202C6-T□2	GYH302C6-T□2
1.0kW	**1.5kW**	**2.0kW**	**3.0kW**

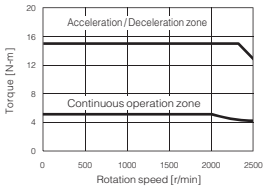

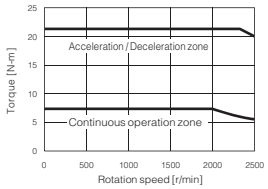

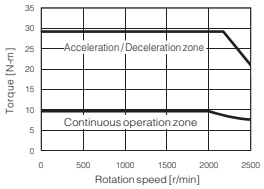

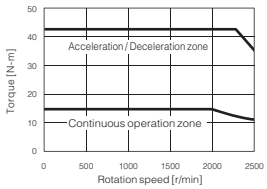

GYH402C6-T□2	GYH552C6-T□2	GYH702C6-T□2
4.0kW	**5.5kW**	**7.0kW**

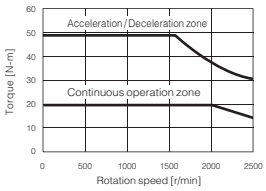

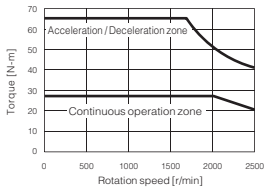

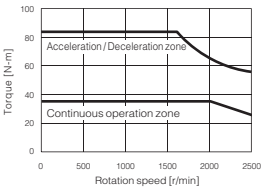

These characteristics indicate typical values of each servomotor combined with the corresponding servo amplifier RYH series.
The rated torque indicates the value obtained when the servo amplifier is installed to the following aluminum heat sink.

- Model GYH102,152,302 : 400 ×400 ×12 [mm]
- Model GYH402,552,702 : 600 ×600 ×25 [mm]

Middle Inertia GYG Motor [2000r/min, 1500r/min]

Standard specifications

Motor type (-B) indicates the brake-incorporated type.	GYG501C5 - 2 (-B)	GYG751C5 - 2 (-B)	GYG102C5 - 2 (-B)	GYG152C5 - 2 (-B)	GYG202C5 - 2 (-B)	GYG501B5 - 2 (-B)	GYG851B5 - 2 (-B)	GYG132B5 - 2 (-B)
Rated output [kW]	0.5	0.75	1.0	1.5	2.0	0.5	0.85	1.3
Rated torque [N · m]	2.39	3.58	4.77	7.16	9.55	3.18	5.41	8.28
Rated speed [r/min]	2000					1500		
Max. speed [r/min]	3000							
Max. torque [N · m]	7.2	10.7	14.3	21.5	28.6	9.5	16.2	24.8
Inertia [kg · m²]	7.96×10^{-4}	11.55×10^{-4}	15.14×10^{-4}	22.33×10^{-4}	29.51×10^{-4}	11.55×10^{-4}	15.15×10^{-4}	22.33×10^{-4}
( ) indicates brake-incorporated type.	(10.0×10^{-4})	(13.6×10^{-4})	(17.2×10^{-4})	(24.4×10^{-4})	(31.6×10^{-4})	(13.6×10^{-4})	(17.3×10^{-4})	(24.5×10^{-4})
Rated current [A]	3.5	5.2	6.4	10.0	12.3	4.7	7.3	11.5
Max. current [A]	10.5	15.6	19.2	30.0	36.9	14.1	21.9	34.5
Winding insulation class	Class F							
Degree of enclosure protection	Totally enclosed, self-cooled (IP 67. excluding the shaft-through)*2							
Terminals (motor)	Cannon connector							
Terminals (encoder)	Cannon connector							
Overheat protection	Not provided (The servo amplifier detects temperature.)							
Mounting method	By securing motor flange IMB5 (L51), IMV1 (L52), IMV3 (L53)							
Encoder	18-bit serial encoder (absolute/incremental), 20-bit serial encoder (incremental)							
Vibration level	V10 or below							
Installation place, altitude and environment	For indoor use (free from direct sunlight), 1000m or below, locations without corrosive and flamable gases, oil mist and dust							
Ambient temperature, humidity	-10 to +40°C, within 90% RH (without condensation)							
Vibration resistance [m/s²]	24.5							
Mass [kg]	5.3	6.4	7.5	9.8	12.0	6.4	7.5	9.8
( ) indicates brake-incorporated type.	(7.5)	(8.6)	(9.7)	(12.0)	(14.2)	(8.6)	(9.7)	(12.0)
Compliance with standards	UL/cUL (UL1004), CE marking (EN60034-1, EN60034-5), RoHS directive							

*1 The load inertia ratio to the inertia of servo motor. If the moment of load inertia ratio value exceeds the list value, please contact us.
*2 If the motor is used in the environment rated to IP67 protection degree, use the wiring connector suitable for the protection degree.

Brake specifications (motor equipped with a brake)

Motor type	GYG501C5 - 2-B	GYG751C5 - 2-B	GYG102C5 - 2-B	GYG152C5 - 2-B	GYG202C5 - 2-B	GYG501B5 - 2-B	GYG851B5 - 2-B	GYG132B5 - 2-B
Static friction torque [N · m]	17							
Rated DC voltage [V]	DC24±10%							
Attraction time [ms]	120							
Release time [ms]	30							
Power consumption [W]	12 (at 20 °C)							

Torque characteristics diagrams (at 3-phase 200 [V] or single-phase 230 [V] source voltage)

GYG501C5-□□2	GYG751C5-□□2	GYG102C5-□□2	GYG152C5-□□2	GYG202C5-□□2
0.5kW	**0.75kW**	**1.0kW**	**1.5kW**	**2.0kW**

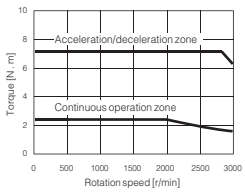

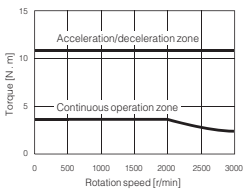

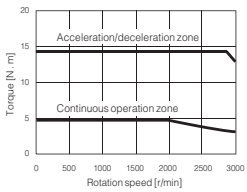

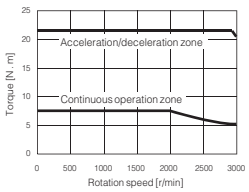

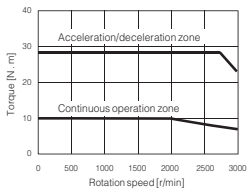

GYG501B5-□□2	GYG851B5-□□2	GYG132B5-□□2
0.5kW	0.85kW	1.3kW

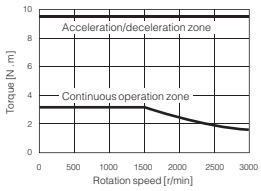

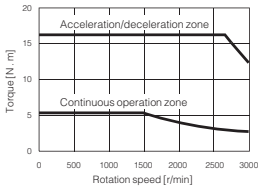

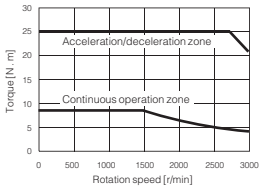

These characteristics indicate typical values of each servomotor combined with the corresponding servo amplifier RYH series.
The rated torque indicates the value obtained when the servo amplifier is installed to the following aluminum heat sink.

- Model GYG501C, 751C, 102C : 300 ×300 ×12 [mm]
- Model GYG152C, 202C : 400 ×400 ×12 [mm]
- Model GYG501B, 851B : 300 ×300 ×12 [mm]
- Model GYG132B : 400 ×400 ×12 [mm]

Ultra-low Inertia GYS Motor [3000r/min]

Standard specifications

Motor type (-B) indicates the brake-incorporated type.	GYS500D5 - 2 (-B)	GYS101D5 - 2 (-B)	GYS201D5 - 2 (-B)	GYS401D5 - 2 (-B)	GYS751D5 - 2 (-B)	GYS102D5 - 2 (-B)	GYS152D5 - 2 (-B)	GYS202D5 - 2 (-B)	GYS302D5 - 2 (-B)	GYS402D5 - 2 (-B)	GYS502D5 - 2 (-B)
Rated output [kW]	0.05	0.1	0.2	0.4	0.75	1.0	1.5	2.0	3.0	4.0	5.0
Rated torque [N · m]	0.159	0.318	0.637	1.27	2.39	3.18	4.78	6.37	9.55	12.7	15.9
Rated speed [r/min]	3000										
Max. speed [r/min]	6000 *1					5000					
Max. torque [N · m]	0.478	0.955	1.91	3.82	7.17	9.55	14.3	19.1	28.7	38.2	47.8
Inertia [kg · m²]	0.0192×10^{-4}	0.0371×10^{-4}	0.135×10^{-4}	0.246×10^{-4}	0.853×10^{-4}	1.73×10^{-4}	2.37×10^{-4}	3.01×10^{-4}	8.32×10^{-4}	10.8×10^{-4}	12.8×10^{-4}
( ) indicates brake-incorporated type.	(0.0223×10^{-4})	(0.0402×10^{-4})	(0.159×10^{-4})	(0.270×10^{-4})	(0.949×10^{-4})	(2.03×10^{-4})	(2.67×10^{-4})	(3.31×10^{-4})	(10.42×10^{-4})	(12.9×10^{-4})	(14.9×10^{-4})
Rated current [A]	0.85	0.85	1.5	2.7	4.8	7.1	9.6	12.6	18.0	24.0	30.0
Max. current [A]	2.55	2.55	4.5	8.1	14.4	21.3	28.8	37.8	54.0	72.0	90.0
Winding insulation class	Class B					Class F					
Degree of enclosure protection	Totally enclosed, self-cooled (IP 67. excluding the shaft-through and connectors)					Totally enclosed, self-cooled (IP 67. excluding the shaft-through)*2					
Terminals (motor)	Cable 0.3m (with connector)					Cannon connector					
Terminals (encoder)	Cable 0.3m (with connector)					Cannon connector					
Overheat protection	Not provided (The servo amplifier detects temperature.)										
Mounting method	By securing motor flange IMB5 (L51), IMV1 (L52), IMV3 (L53)										
Encoder	18-bit serial encoder (absolute/incremental), 20-bit serial encoder (incremental)										
Vibration level	V5 or below					Up to rated rotation speed: V10 or below Over rated rotation speed and up to 5000r/min: V15 or below					
Installation place, altitude and environment	For indoor use (free from direct sunlight), 1000m or below, locations without corrosive and flamable gases, oil mist and dust										
Ambient temperature, humidity	-10 to +40°C, within 90% RH (without condensation)										
Vibration resistance [m/s²]	49					24.5					
Mass [kg]	0.45	0.55	1.2	1.8	3.4	4.4	5.2	6.3	11.0	13.5	16.0
( ) indicates brake-incorporated type.	(0.62)	(0.72)	(1.7)	(2.3)	(4.2)	(5.9)	(6.8)	(7.9)	(13.0)	(15.5)	(18.0)
Compliance with standards	UL/cUL (UL1004), CE marking (EN60034-1, EN60034-5), RoHS directive										

*1 The maximum rotation speed is 5000r/min when using the motor in combination with Fuji's gear head.
*2 If the motor is used in the environment rated to IP67 protection degree, use the wiring connector suitable for the protection degree.

Brake specifications (motor equipped with a brake)

Motor type	GYS500D5 - 2-B	GYS101D5 - 2-B	GYS201D5 - 2-B	GYS401D5 - 2-B	GYS751D5 - 2-B	GYS102D5 - 2-B	GYS152D5 - 2-B	GYS202D5 - 2-B	GYS302D5 - 2-B	GYS402D5 - 2-B	GYS502D5 - 2-B
Static friction torque [N · m]	0.34		1.27		2.45	6.86			17		
Rated DC voltage [V]	DC24±10%										
Attraction time [ms]	35		40		60	100			120		
Release time [ms]	10		20		25	40			30		
Power consumption [W]	6.1 (at 20 °C)		7.3 (at 20 °C)		8.5 (at 20 °C)	17.7 (at 20 °C)			12 (at 20 °C)		

Torque characteristics diagrams (at 3-phase 200 [V] or single-phase 230 [V] source voltage)

GYS500D5-□□2	GYS101D5-□□2	GYS201D5-□□2	GYS401D5-□□2
0.05kW	0.1kW	0.2kW	0.4kW

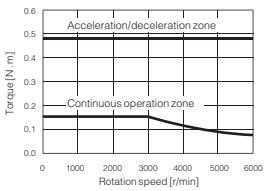

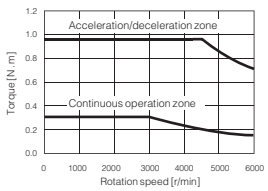

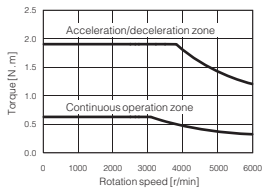

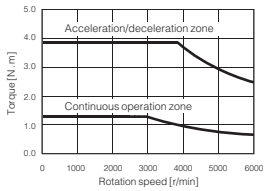

GYS751D5-□□2	GYS102D5-□□2	GYS152D5-□□2	GYS202D5-□□2
0.75kW	1.0kW	1.5kW	2.0kW

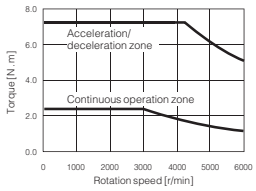

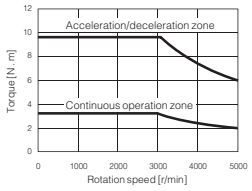

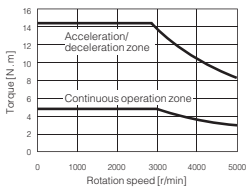

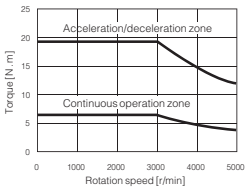

GYS302D5-□□2	GYS402D5-□□2	GYS502D5-□□2
3.0kW	4.0kW	5.0kW

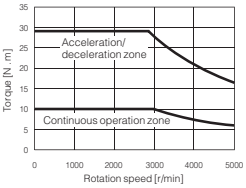

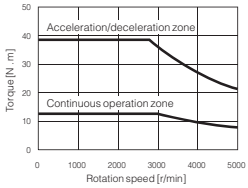

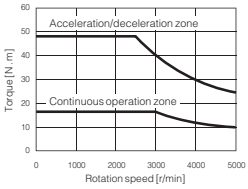

These characteristics indicate typical values of each servomotor combined with the corresponding servo amplifier RYH series. The rated torque indicates the value obtained when the servo amplifier is installed to the following aluminum heat sink.

- Model GYS500D, 101D : 200×200×6 [mm]
- Model GYS201D, 401D : 250×250×6 [mm]
- Model GYS751D : 300×300×6 [mm]
- Model GYS102D, 152D, 202D : 350×350×8 [mm]

Sarvo amplifier

Frame 1

Applicable motor output	Type
200W, 100W, 50W	RYH201F5-VV2
400W	RYH401F5-VV2

(Unit : mm)

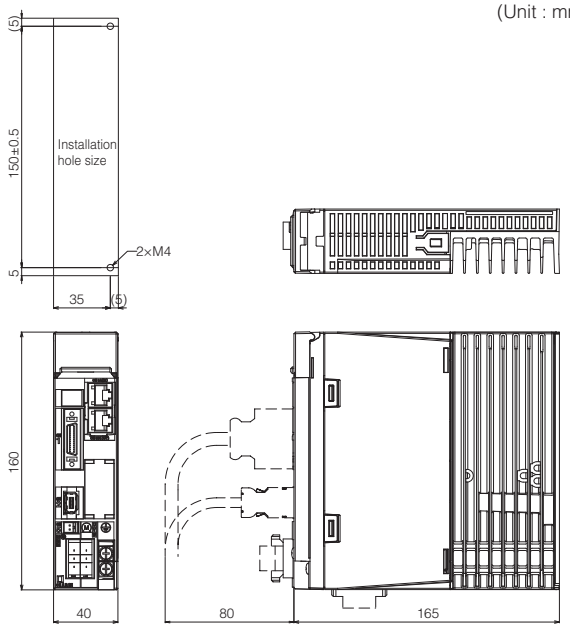

[Mass:0.8kg]

Frame 2

Applicable motor output	Type
500W, 750W, 1.0kW(GYH)	RYH751F5-VV2
850W, 1.0kW, 1.5kW, 2.0kW(GYH)	RYH152F5-VV2

(Unit : mm)

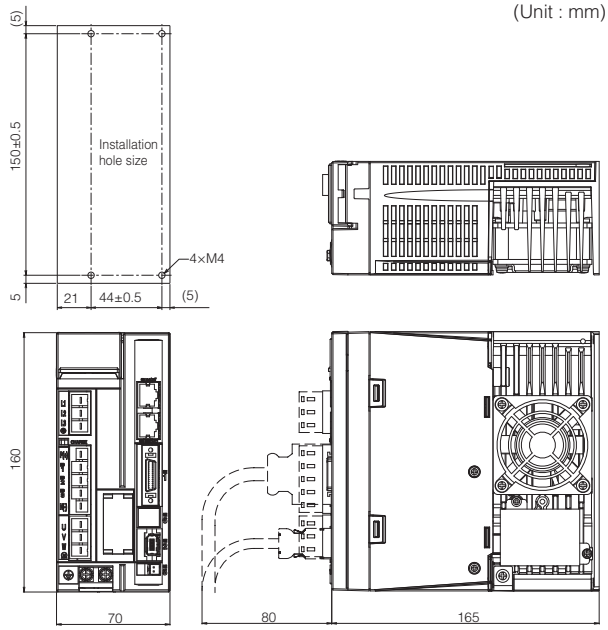

[Mass:1.3kg]

Frame 3

Applicable motor output	Type
1.3kW, 2.0kW, 3.0kW(GYH)	RYH202F5-VV2
3.0kW, 4.0kW(GYH)	RYH302F5-VV2

(Unit : mm)

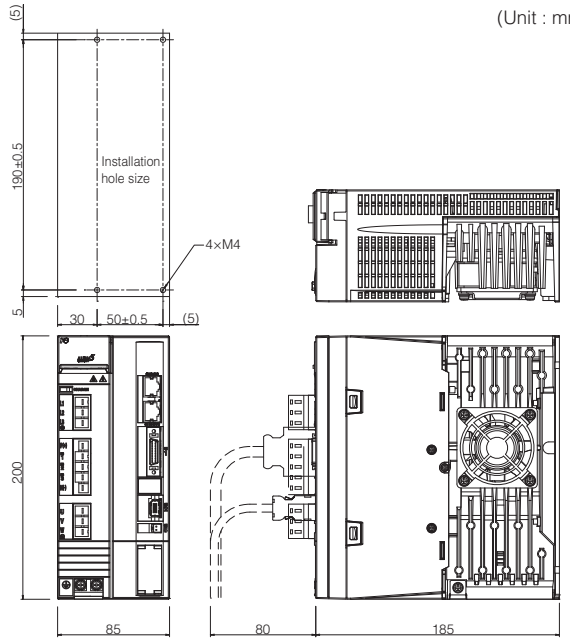

[Mass:2.2kg]

Frame 4

Applicable motor output	Type
4.0kW, 5.5kW(GYH)	RYH402F5-VV2
5.0kW, 7.0kW(GYH)	RYH502F5-VV2

(Unit : mm)

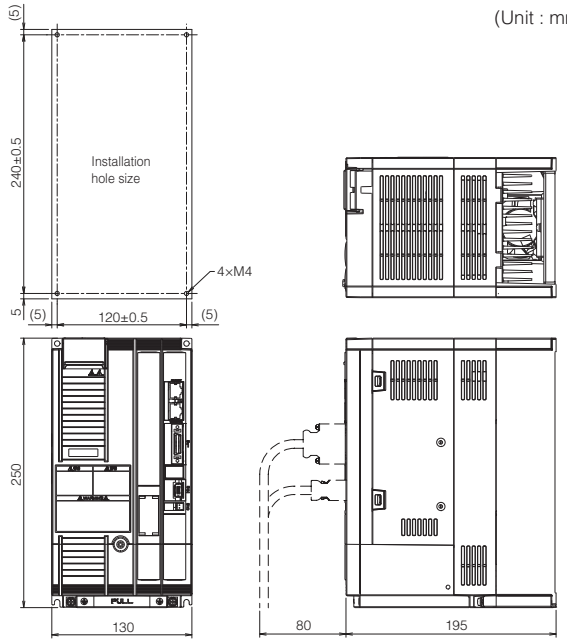

[Mass:3.6kg]

Middle Inertia GYB Motor [3000r/min]

(Unit : mm)

Without Brake

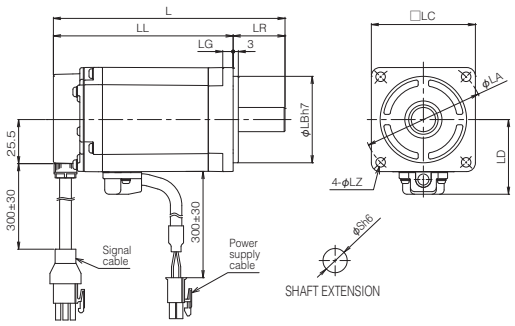

Rated speed [r/min]	Rated output [kW]	Model codes (without brake)	L	LL	Flange dimensions							S	Mass [kg]
					LR	LG	LB	LC	LA	LD	LZ		
3000	0.2	GYB201D5-□B2	112	82	30	6	50	60	70	43	5.5	14	1.0
	0.4	GYB401D5-□B2	134	104	30	6	50	60	70	43	5.5	14	1.5
	0.75	GYB751D5-□B2	157	117	40	8	70	80	90	53	7	19	3.0

(Unit : mm)

With Brake

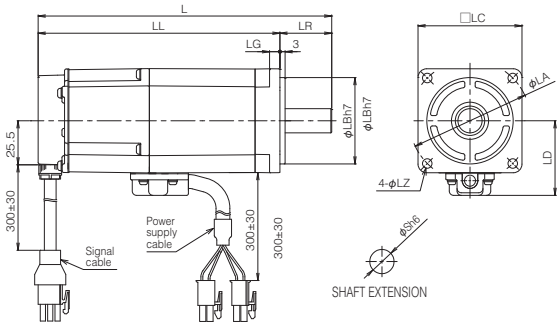

Rated speed [r/min]	Rated output [kW]	Model codes (with brake)	L	LL	Flange dimensions							S	Mass [kg]
					LR	LG	LB	LC	LA	LD	LZ		
3000	0.2	GYB201D5-□B2-B	148	118	30	6	50	60	70	43	5.5	14	1.5
	0.4	GYB401D5-□B2-B	170	140	30	6	50	60	70	43	5.5	14	2.1
	0.75	GYB751D5-□B2-B	194.5	154.5	40	8	70	80	90	53	7	19	3.9

□ : Encoder type R : INC(20bit), H : ABS(18bit)

Middle Inertia GYH Motor [2000r/min]

Without Brake

(Unit : mm)

A

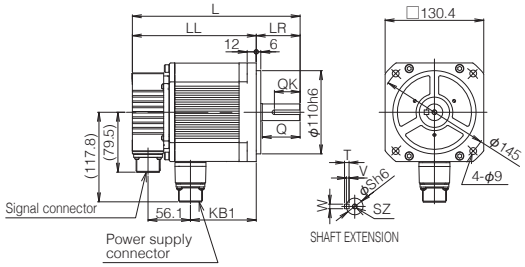

B

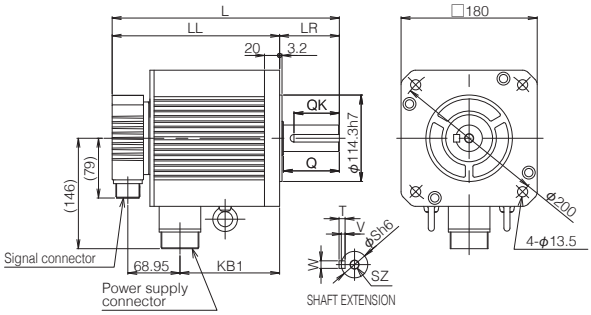

Rated speed [r/min]	Rated output [kW]	Model codes (without brake)	Fig	L	LL	LR	S	Q	QK	W	T	V	SZ	KB1
2000	1.0	GYH102C6-TC2	A	221.8	163.8	58	22	50	35	6	6	3.5	M6 depth:15	87
	1.5	GYH152C6-TC2	A	241.8	183.8	58	22	50	35	6	6	3.5	M6 depth:15	107
	2.0	GYH202C6-TC2	A	271.8	213.8	58	22	50	35	6	6	3.5	M6 depth:15	137
	3.0	GYH302C6-TC2	A	321.8	263.8	58	22	50	35	6	6	3.5	M6 depth:15	187
	4.0	GYH402C6-TC2	B	332.4	253.4	79	35	74	60	10	8	5	M12 depth:24	163.75
	5.5	GYH552C6-TC2	B	361.4	282.4	79	35	74	60	10	8	5	M12 depth:24	192.75
	7.0	GYH702C6-TC2	B	409.4	296.4	113	42	108	90	12	8	5	M16 depth:32	206.75

With Brake

(Unit : mm)

C

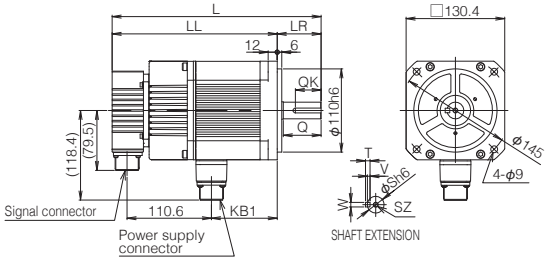

D

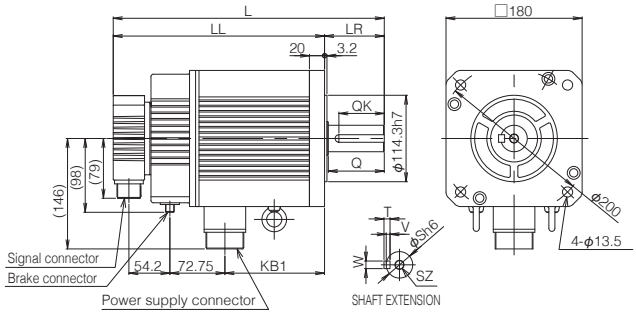

Rated speed [r/min]	Rated output [kW]	Model codes (with brake)	Fig	L	LL	LR	S	Q	QK	W	T	V	SZ	KB1
2000	1.0	GYH102C6-TC2-B	C	276.3	218.3	58	22	50	35	6	6	3.5	M6 depth:15	87
	1.5	GYH152C6-TC2-B	C	296.3	238.3	58	22	50	35	6	6	3.5	M6 depth:15	107
	2.0	GYH202C6-TC2-B	C	326.3	268.3	58	22	50	35	6	6	3.5	M6 depth:15	137
	3.0	GYH302C6-TC2-B	C	376.3	318.3	58	22	50	35	6	6	3.5	M6 depth:15	187
	4.0	GYH402C6-TC2-B	D	390.4	311.4	79	35	74	60	10	8	5	M12 depth:24	163.75
	5.5	GYH552C6-TC2-B	D	419.4	340.4	79	35	74	60	10	8	5	M12 depth:24	192.75
	7.0	GYH702C6-TC2-B	D	467.4	354.4	113	42	108	90	12	8	5	M16 depth:32	206.75

Middle Inertia GYG Motor [2000r/min, 1500r/min]

Without Brake

(Unit : mm)

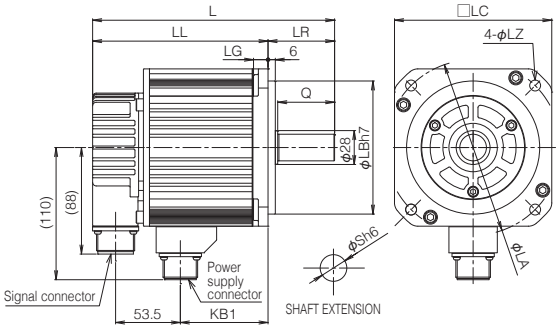

Rated speed [r/min]	Rated output [kW]	Model codes (without brake)	L	LL	Flange dimensions								S	Mass [kg]
					LR	LG	Q	LB	KB1	LC	LA	LZ		
2000	0.5	GYG501C5-□B2	175	120	55	12	47	110	47.5	130	145	9	19	5.3
	0.75	GYG751C5-□B2	187.5	132.5	55	12	47	110	60	130	145	9	19	6.4
	1.0	GYG102C5-□B2	200	145	55	12	47	110	72.5	130	145	9	22	7.5
	1.5	GYG152C5-□B2	225	170	55	12	47	110	97.5	130	145	9	22	9.8
	2.0	GYG202C5-□B2	250	195	55	12	47	110	122.5	130	145	9	22	12
1500	0.5	GYG501B5-□B2	190.5	132.5	58	12	40	110	60	130	145	9	19	6.4
	0.85	GYG851B5-□B2	203	145	58	12	40	110	72.5	130	145	9	19	7.5
	1.3	GYG132B5-□B2	228	170	58	12	40	110	97.5	130	145	9	22	9.8

With Brake

(Unit : mm)

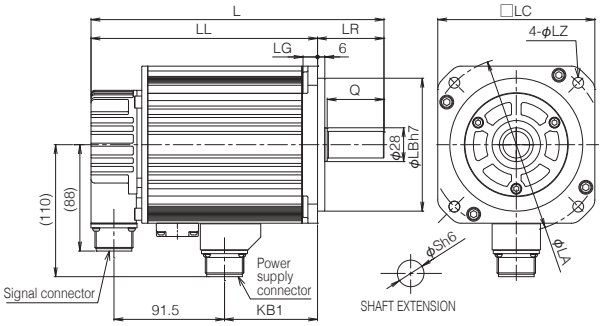

Rated speed [r/min]	Rated output [kW]	Model codes (without brake)	L	LL	Flange dimensions								S	Mass [kg]
					LR	LG	Q	LB	KB1	LC	LA	LZ		
2000	0.5	GYG501C5-□B2-B	217.5	162.5	55	12	47	110	52	130	145	9	19	7.5
	0.75	GYG751C5-□B2-B	230	175	55	12	47	110	64.5	130	145	9	19	8.6
	1.0	GYG102C5-□B2-B	242.5	187.5	55	12	47	110	77	130	145	9	22	9.7
	1.5	GYG152C5-□B2-B	267.5	212.5	55	12	47	110	102	130	145	9	22	12
	2.0	GYG202C5-□B2-B	292.5	237.5	55	12	47	110	127	130	145	9	22	14.2
1500	0.5	GYG501B5-□B2-B	233	175	58	12	40	110	64.5	130	145	9	19	8.6
	0.85	GYG851B5-□B2-B	245.5	187.5	58	12	40	110	77	130	145	9	19	9.7
	1.3	GYG132B5-□B2-B	270.5	212.5	58	12	40	110	102	130	145	9	22	12

□ : Encoder type R : INC(20bit), H : ABS(18bit)

Ultra-low Inertia GYS Motor [3000r/min]

(Unit : mm)

Without Brake

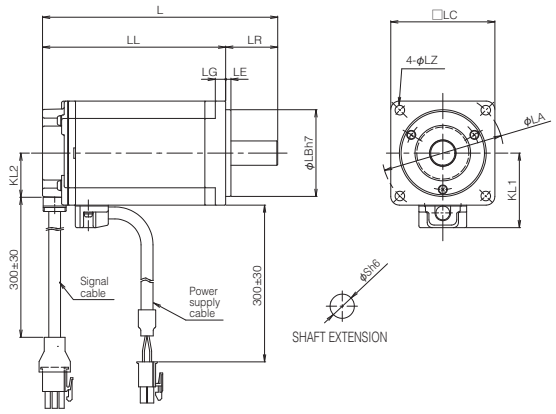

Without Brake

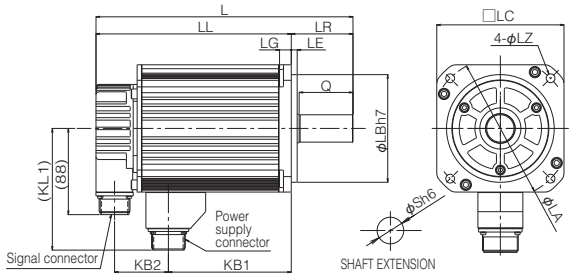

Rated speed [r/min]	Rated output [kW]	Model codes (without brake)	L	LL	Flange dimensions									S	Mass [kg]
					LR	LG	LE	LB	KL2	LC	LA	LZ	KL1		
3000	0.05	GYS500D5-□B2	89	64	25	5	2.5	30	21	40	46	4.3	33	6	0.45
	0.1	GYS101D5-□B2	107	82	25	5	2.5	30	21	40	46	4.3	33	8	0.55
	0.2	GYS201D5-□B2	107.5	77.5	30	6	3	50	25.5	60	70	5.5	43	14	1.2
	0.4	GYS401D5-□B2	135.5	105.5	30	6	3	50	25.5	60	70	5.5	43	14	1.8
	0.75	GYS751D5-□B2	161	121	40	8	3	70	25.5	80	90	7	53	16	3.4

Rated speed [r/min]	Rated output [kW]	Model codes (without brake)	L	LL	Flange dimensions											S	Mass [kg]
					LR	LG	LE	Q	LB	KB1	KB2	LC	LA	LZ	KL1		
3000	1.0	GYS102D5-□B2	198	153	45	10	3	40	95	77	57	100	115	9	95.5	24	4.4
	1.5	GYS152D5-□B2	220.5	175.5	45	10	3	40	95	99.5	57	100	115	9	95.5	24	5.2
	2.0	GYS202D5-□B2	243	198	45	10	3	40	95	122	57	100	115	9	95.5	24	6.3
	3.0	GYS302D5-□B2	262.5	199.5	63	12	6	55	110	125.5	55	130	145	9	125	28	11
	4.0	GYS402D5-□B2	292.5	229.5	63	12	6	55	110	155.5	55	130	145	9	125	28	13.5
	5.0	GYS502D5-□B2	322.5	259.5	63	12	6	55	110	185.5	55	130	145	9	125	28	16

(Unit : mm)

With Brake

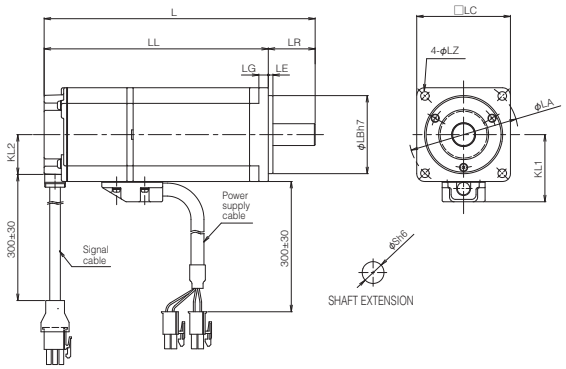

With Brake

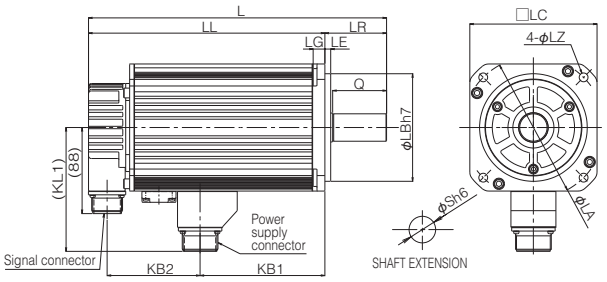

Rated speed [r/min]	Rated output [kW]	Model codes (with brake)	L	LL	Flange dimensions									S	Mass [kg]
					LR	LG	LE	LB	KL2	LC	LA	LZ	KL1		
3000	0.05	GYS500D5-□B2-B	123.5	98.5	25	5	2.5	30	21	40	46	4.3	33	6	0.62
	0.1	GYS101D5-□B2-B	141.5	116.5	25	5	2.5	30	21	40	46	4.3	33	8	0.72
	0.2	GYS201D5-□B2-B	145.5	115.5	30	6	3	50	25.5	60	70	5.5	43	14	1.7
	0.4	GYS401D5-□B2-B	173.5	143.5	30	6	3	50	25.5	60	70	5.5	43	14	2.3
	0.75	GYS751D5-□B2-B	197	157	40	8	3	70	25.5	80	90	7	53	16	4.2

Rated speed [r/min]	Rated output [kW]	Model codes (with brake)	L	LL	Flange dimensions											S	Mass [kg]
					LR	LG	LE	Q	LB	KB1	KB2	LC	LA	LZ	KL1		
3000	1.0	GYS102D5-□B2-B	239	194	45	10	3	40	95	79	96	100	115	9	96	24	5.9
	1.5	GYS152D5-□B2-B	261.5	216.5	45	10	3	40	95	101.5	96	100	115	9	96	24	6.8
	2.0	GYS202D5-□B2-B	284	239	45	10	3	40	95	124	96	100	115	9	96	24	7.9
	3.0	GYS302D5-□B2-B	304.5	241.5	63	12	6	55	110	127.5	95	130	145	9	127	28	13
	4.0	GYS402D5-□B2-B	334.5	271.5	63	12	6	55	110	157.5	95	130	145	9	127	28	15.5
	5.0	GYS502D5-□B2-B	364.5	301.5	63	12	6	55	110	187.5	95	130	145	9	127	28	18

□ : Encoder type R : INC(20bit), H : ABS(18bit)

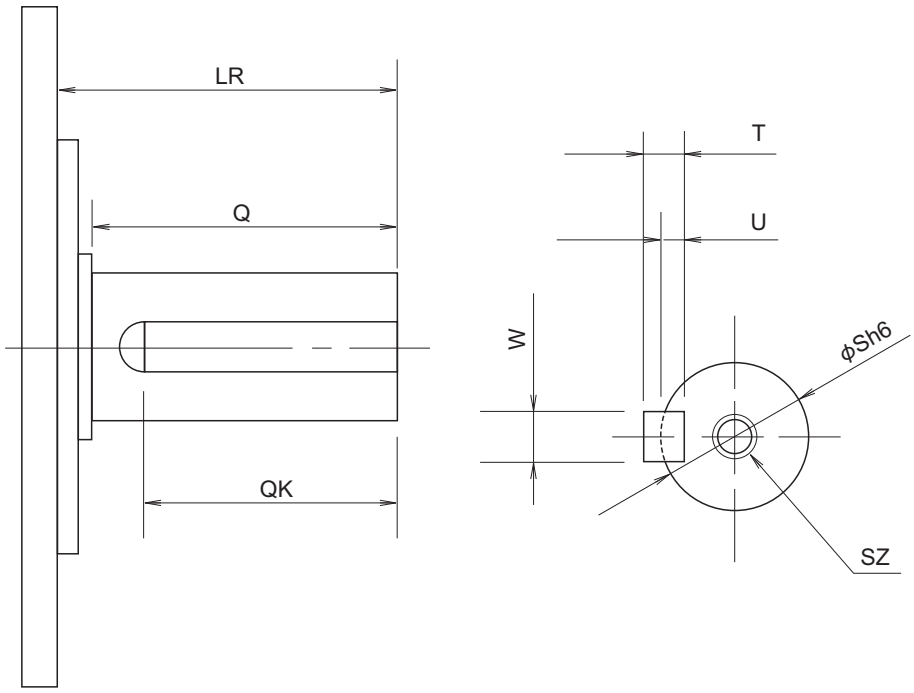

Motor type	LR	Q	QK	S	T	U	W	SZ
GYB motor								
GYB201D5-□C2-□	30	–	14	14	5	3	5	M5 depth:8
GYB401D5-□C2-□								
GYB751D5-□C2-□	40	–	22	19	6	3.5	6	M6 depth:10
GYG motor 2000r/min								
GYG501C5-□C2-□	55	47	35	19	6	3.5	6	M6 depth:12
GYG751C5-□C2-□								
GYG102C5-□C2-□				22	7	4	8	M8 depth:16
GYG152C5-□C2-□								
GYG202C5-□C2-□								
GYG motor 1500r/min								
GYG501B5-□C2-□	58	40	30	19	6	3.5	6	M6 depth:12
GYG851B5-□C2-□								
GYG132B5-□C2-□				22	7	4	8	M8 depth:16
GYS motor								
GYS500D5-□A□-□*1	25	–	14	6	2	1.2	2	–
GYS101D5-□A□-□*1				8	3	1.8	3	–
GYS201D5-□C□-□	30		20	14	5	3	5	M5 depth:8
GYS401D5-□C□-□								
GYS751D5-□C2-□	40		30	16				
GYS102D5-□C2-□	45	40	32	24	7	4	8	M8 depth:16
GYS152D5-□C2-□								
GYS202D5-□C2-□								

*1 The shaft extension of the GYS and GYC motors of 0.1kW or less is not tapped.
The GYH type is a standard specification motor equipped with a key.

Configuration diagram

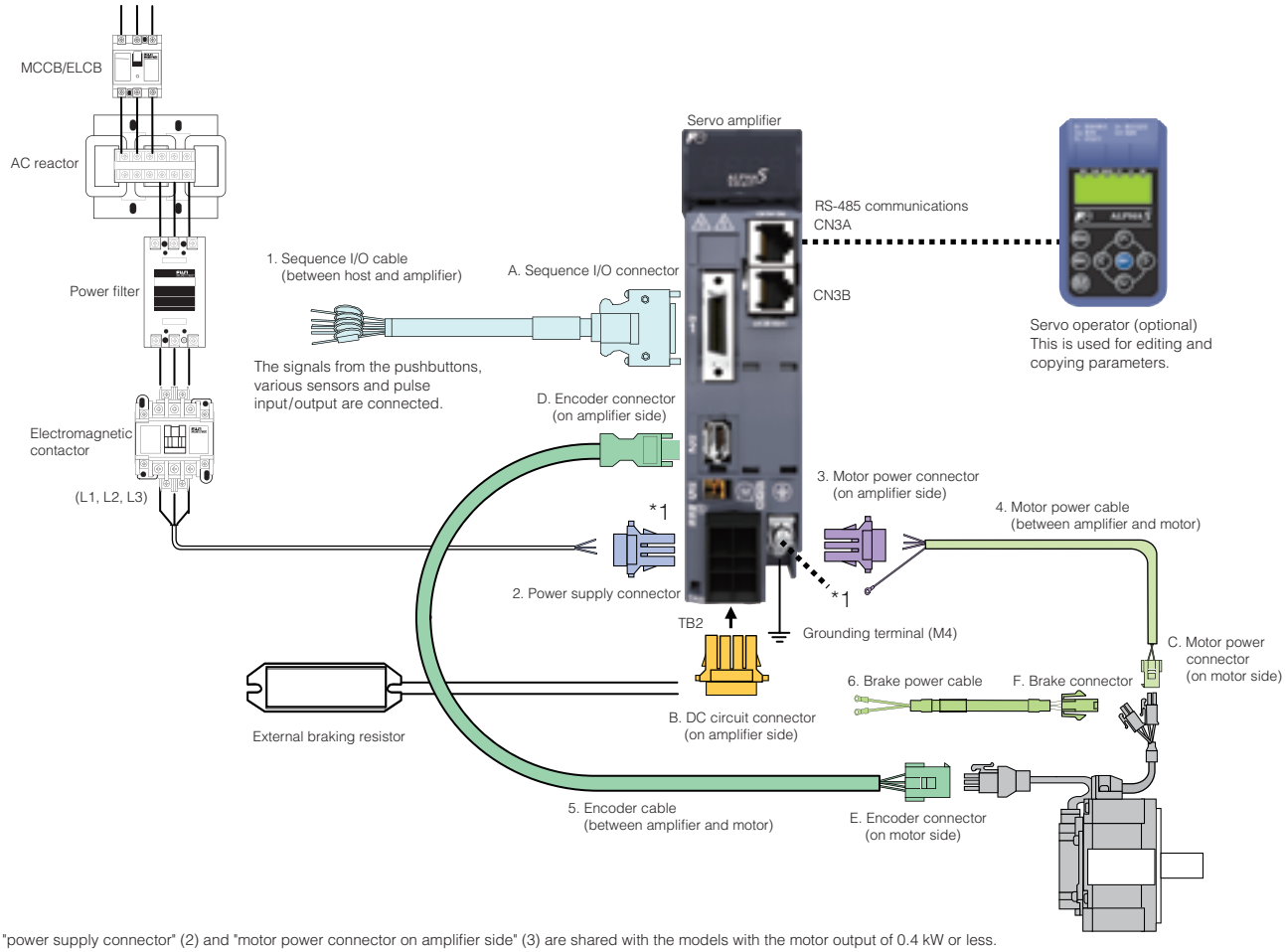

*1: "power supply connector" (2) and "motor power connector on amplifier side" (3) are shared with the models with the motor output of 0.4 kW or less.

Peripheral equipment

Input power	Rated speed	Motor output [kW]	Applicable servo amplifier type	Power capacity [kVA]	Input current [A]	Power filter	AC reactor	Wiring breaker MCCB	Earth leakage breaker ELCB	Electromagnetic contactor MC
Single-phase 200V	3000r/min	0.05	RYH201F5-VV2	0.1	0.7	RNFTC06-20	ACR2-0.4A	BW32AAG-2P/3	EW32AAG-2P/3	SC-03
		0.1		0.2	1.3					
		0.2		0.4	2.4		ACR2-0.75A	BW32AAG-2P/5	EW32AAG-2P/5	
		0.4	RYH401F5-VV2	0.8	4.7	RNFTC10-20	ACR2-1.5A	BW32AAG-2P/10	EW32AAG-2P/10	
		0.75	RYH751F5-VV2	1.5	8.6	RNFTC20-20	ACR2-2.2A	BW32AAG-2P/15	EW32AAG-2P/15	SC-0
	2000r/min	0.5	RYH751F5-VV2	1.0	5.8	RNFTC10-20	ACR2-1.5A	BW32AAG-2P/10	EW32AAG-2P/10	SC-03
		0.75		1.5	8.6	RNFTC20-20	ACR2-2.2A	BW32AAG-2P/15	EW32AAG-2P/15	SC-0
	1500r/min	0.5	RYH751F5-VV2	1.0	5.8	RNFTC10-20	ACR2-1.5A	BW32AAG-2P/10	EW32AAG-2P/10	SC-03
3-phase 200V	3000r/min	0.05	RYH201F5-VV2	0.1	0.4	RNFTC06-20	ACR2-0.4A	BW32AAG-3P/3	EW32AAG-3P/3	SC-03
		0.1		0.2	0.7					
		0.2		0.4	1.4					
		0.4	RYH401F5-VV2	0.8	2.7		ACR2-0.75A	BW32AAG-3P/5	EW32AAG-3P/5	
		0.75	RYH751F5-VV2	1.5	5.0	RNFTC10-20	ACR2-1.5A	BW32AAG-3P/10	EW32AAG-3P/10	
		1.0	RYH152F5-VV2	2.0	6.6		ACR2-2.2A	BW32AAG-3P/15	EW32AAG-3P/15	
		1.5		2.9	9.8	RNFTC20-20		BW32AAG-3P/20	EW32AAG-3P/20	SC-4-1
		2.0	RYH202F5-VV2	3.9	13.0		ACR2-3.7A	BW32AAG-3P/30	EW32AAG-3P/30	
		3.0	RYH302F5-VV2	5.9	19.5	RNFTC30-20	ACR2-5.5A	BW50AAG-3P/40	EW50AAG-3P/50	SC-N1
		4.0	RYH402F5-VV2	7.8	26.5	RNFTC50-20	ACR2-7.5A	BW50AAG-3P/50	EW50AAG-3P/50	SC-N2
		5.0	RYH502F5-VV2	9.8	32.5		ACR2-11A			
	2000r/min	0.5	RYH751F5-VV2	1.0	3.3	RNFTC06-20	ACR2-0.75A	BW32AAG-3P/10	EW32AAG-3P/10	SC-03
		0.75		1.5	5.0	RNFTC10-20	ACR2-1.5A			
		1.0	RYH152F5-VV2	2.0	6.6		ACR2-2.2A	BW32AAG-3P/15	EW32AAG-3P/15	
		1.5		2.9	9.8	RNFTC20-20		BW32AAG-3P/20	EW32AAG-3P/20	SC-4-1
		2.0	RYH202F5-VV2	3.9	13.0		ACR2-3.7A	BW32AAG-3P/30	EW32AAG-3P/30	
	1500r/min	0.5	RYH751F5-VV2	1.0	3.3	RNFTC06-20	ACR2-0.75A	BW32AAG-3P/10	BW32AAG-3P/10	SC-03
		0.85	RYH152F5-VV2	1.7	5.6	RNFTC10-20	ACR2-1.5A			
		1.3	RYH202F5-VV2	2.6	8.5	RNFTC20-20	ACR2-2.2A	BW32AAG-3P/15	EW32AAG-3P/15	SC-0

ALPHA5 Smart

Options

Basic option

* Prepare the optional items below when using the ALPHA5 Smart series.

Motor series	Rated speed	Rated output	Brake	1. Sequence I/O cable (between host and amplifier)	2. Power supply connector	B. DC circuit connector (on amplifier side)	3. Motor power connector (on amplifier side)	4. Motor power cable (between amplifier and motor)	5. Encoder cable (between amplifier and motor)	6. Brake power cable
GYB motor	3000r/min	0.2kW, 0.4kW	W/o	WSC-D26P02 *4 WSC-D26P02-F *3 WSC-D26P03	WSK-S06P-F	WSK-R04P-F	*1	WSC-M04P02-E (2m) WSC-M04P05-E (5m) WSC-M04P10-E (10m) WSC-M04P20-E (20m)	WSC-P06P02-E (2m) WSC-P06P05-E (5m) WSC-P06P10-E (10m) WSC-P06P20-E (20m)	–
			W/							WSC-M02P02-E (2m) WSC-M02P05-E (5m) WSC-M02P10-E (10m) WSC-M02P20-E (20m)
		0.75kW	W/o		WSK-S03P-F	*2	WSK-M03P-F			–
			W/							WSC-M02P02-E (2m) WSC-M02P05-E (5m) WSC-M02P10-E (10m) WSC-M02P20-E (20m)
GYH motor	2000r/min	1.0kW to 4.0W	W/o					Prepared by customer	WSC-P06P05-W WSC-P06P10-W WSC-P06P20-W	–
			W/							
		5.5kW to 7.0kW	W/o		–	–	–			
			W/							
GYG motor	2000r/min	0.5kW to 2.0W	W/o		WSK-S03P-F	*2	WSK-M03P-F		WSC-P06P05-C (5m) WSC-P06P10-C (10m) WSC-P06P20-C (20m)	–
			W/							Prepared by customer
GYG motor	1500r/min	0.5kW to 1.3kW	W/o							–
			W/							Prepared by customer
GYS motor	3000r/min	0.05kW to 0.4kW	W/o		WSK-S06P-F	WSK-R04P-F	*1	WSC-M04P02-E (2m) WSC-M04P05-E (5m) WSC-M04P10-E (10m) WSC-M04P20-E (20m)	WSC-P06P02-E (2m) WSC-P06P05-E (5m) WSC-P06P10-E (10m) WSC-P06P20-E (20m)	–
			W/							WSC-M02P02-E (2m) WSC-M02P05-E (5m) WSC-M02P10-E (10m) WSC-M02P20-E (20m)
		0.75kW	W/o		WSK-S03P-F	*2	WSK-M03P-F			–
			W/							WSC-M02P02-E (2m) WSC-M02P05-E (5m) WSC-M02P10-E (10m) WSC-M02P20-E (20m)
		1.0kW to 3.0kW	W/o					Prepared by customer	WSC-P06P05-C (5m) WSC-P06P10-C (10m) WSC-P06P20-C (20m)	–
			W/							Prepared by customer
		4.0kW to 5.0kW	W/o		–	–	–			–
			W/							Prepared by customer

*1: The connector is shared by the motor power (on the amplifiler side) and the power supply.
*2: The connector is not necessary as it is included in the package of servo amplifier.
*3: When connecting the open collector, Please use the sequence input/output cable for open collector (DC24V).
*4: When connecting the open collector, Please use the sequence input/output cable for open collector (Outside DC24V).

Options

Connector kit options

* If the cables are fabricated by the customer, please use the connectors below.

Motor series	Rated speed	Rated output	Brake	A. Sequence I/O connector	2. Power supply connector	B. DC circuit connector (on amplifier side)	3. Motor power connector (on amplifier side)	C. Motor power connector (on motor side)	Encoder connector D. on amplifier side	Encoder connector E. on motor side	F. Brake connector
GYB motor	3000r/min	0.2kW, 0.4kW	W/o	WSK-D26P	WSK-S06P-F	WSK-R04P-F	*1	WSK-M04P-E	WSK-P06P-M	WSK-P09P-D	–
			W/								WSK-M02P-E
		0.75kW	W/o		WSK-S03P-F	*2	WSK-M03P-F				–
			W/								WSK-M02P-E
GYH motor	2000r/min	1.0kW to 4.0kW	W/o					See table below.		See table below.	See table below.
			W/								
		5.5kW to 7.0kW	W/o		–	–	–				
			W/								
GYG motor	2000r/min	0.5kW to 2.0kW	W/o		WSK-S03P-F	*2	WSK-M03P-F	WSK-M04P-CA		WSK-P06P-C	–
			W/					WSK-M06P-CA			
GYG motor	1500r/min	0.5kW to 1.3kW	W/o					WSK-M04P-CA			–
			W/					WSK-M06P-CA			
GYS motor	3000r/min	0.05kW to 0.4kW	W/o		WSK-S06P-F	WSK-R04P-F	*1	WSK-M04P-E		WSK-P09P-D	–
			W/								WSK-M02P-E
		0.75kW	W/o		WSK-S03P-F	*2	WSK-M03P-F				–
			W/								WSK-M02P-E
		1.0kW to 2.0kW	W/o					WSK-M04P-CA		WSK-P06P-C	–
			W/					WSK-M06P-CA			
		3.0kW to 5.0kW	W/o		–	–	–	WSK-M04P-CB			
			W/					WSK-M06P-CB			

*1: The connector is shared by the motor power (on the amplifiler side) and the power supply.
*2: The connector is not necessary as it is included in the package of servo amplifier.
*3: When connecting the open collector, Please use the sequence input/output cable for open collector (DC24V).
*4: When connecting the open collector, Please use the sequence input/output cable for open collector (Outside DC24V).

Recommended connectors for GYH motor

Motor series	Rated speed	Rated output	Brake	Selectable connector installed on motor (for reference)	Motor power connector Connector	Motor power connector Cable clamp	F. Brake connector Connector	F. Brake connector Cable clamp	Encoder connector (on motor side) Connector	Encoder connector (on motor side) Cable clamp
GYH motor	2000r/min	1.0kW to 3.0kW	W/o	MS3102A20-4P	MS3108A20-4S	MS3057-12A	–	–	MS31008A20-18S	MS3057-12A
			W/	MS3102A20-15P	MS3108A20-15S *1		–	–		
		4.0kW to 7.0kW	W/o	MS3102A32-17P	MS3108A32-17S	MS3057-20A	–	–		
			W/	Power MS3102A32-17P Brake power supply MS3102A10SL-3P			MS3106A10SL-3S	MS3057-4A		

*1: The GYH type is a standard specification motor equipped with a key.

External regenerative resistor options

Amplifier frame	Built-in	External braking resistor type		External braking resistor type
RYH201F5-VV2	–	WSR-401	17W / 68 Ω	39 to 180
RYH401F5-VV2	–			39 to 90
RYH751F5-VV2	20W / 40 Ω	WSR-152	50W / 15 Ω	13 to 47
RYH152F5-VV2	20W / 15 Ω			8.2 to 27
RYH202F5-VV2	45W / 12 Ω	DB11-2	260W / 10 Ω	8.2 to 20
RYH402F5-VV2	60W / 16 Ω	DB22-2	300W / 5.8 Ω	3.9 to 6.8
RYH502F5-VV3				

ABS backup battery

Amplifier	Optional battery type W/ battery case	Optional battery type Individual battery
All	WSB-SC	WSB-S

Other option

Specifications				Type
For PC loader connection	RS-232C - RS-485 conversion adaptor	For connection of RS-485 port of VV type servo amplifier *1	–	NW0H-CNV
	Cable		2m (connector at both ends)	WSC-PCL
Servo operator *1	–			WSP-51

*1: Use a commercially-available USB cable (USB-A : USB-B, or USB-A : mini-B) when connecting the servo operator to PC.
Use a commercially-available LAN cable when connecting the servo operation to the servo amplifier.

Servo Amplifier

Specifications						Type	Stock Type
Model	Control mode	Command interface	Input voltage	Applicable motor	Applicable motor output		
VV type	Position, speed and torque control (With built-in linear positioning function)	General-purpose interface (pulse or analog voltage) (Modbus-RTU)	Single or 3-phase 200 to 240V	GYB, GYH, GYS motor	0.2kW, 0.1kW, 0.05kW	RYH201F5-VV2	◎
					0.4kW	RYH401F5-VV2	◎
					0.75kW, 0.5kW, 1.0kW(GYH)	RYH751F5-VV2	◎
			3-phase 200 to 240V		1.5kW, 1.0kW, 0.85kW, 2.0kW(GYH)	RYH152F5-VV2	◎
					2.0kW, 1.3kW, 3.0kW(GYH)	RYH202D5-VV2	◎
					3.0kW(GYS), 4.0kW(GYH)	RYH302F5-VV2	◎
					4.0kW(GYS), 5.5kW(GYH)	RYH402F5-VV2	◎
					5.0kW(GYS), 7.0kW(GYH)	RYH502F5-VV2	◎

Servo Motor

Specifications							Type	Stock Type
Model	Voltage	Rated speed	Oil seal/shaft	Encoder	Brake	Rated output		
GYB motor (middle inertia)	200V	3000r/min	with oil seal / with key, tapped	20bit INC	W/o	0.2kW	GYB201D5-RG2	◎
						0.4kW	GYB401D5-RG2	◎
						0.75kW	GYB751D5-RG2	◎
					W/	0.2kW	GYB201D5-RG2-B	◎
						0.4kW	GYB401D5-RG2-B	◎
						0.75kW	GYB751D5-RG2-B	◎
				18bit ABS	W/o	0.2kW	GYB201D5-HG2	△
						0.4kW	GYB401D5-HG2	△
						0.75kW	GYB751D5-HG2	△
					W/	0.2kW	GYB201D5-HG2-B	△
						0.4kW	GYB401D5-HG2-B	△
						0.75kW	GYB751D5-HG2-B	△
			without oil seal / with key, tapped	20bit INC	W/o	0.2kW	GYB201D5-RC2	◎
						0.4kW	GYB401D5-RC2	◎
						0.75kW	GYB751D5-RC2	◎
					W/	0.2kW	GYB201D5-RC2-B	◎
						0.4kW	GYB401D5-RC2-B	◎
						0.75kW	GYB751D5-RC2-B	◎
				18bit ABS	W/o	0.2kW	GYB201D5-HC2	△
						0.4kW	GYB401D5-HC2	△
						0.75kW	GYB751D5-HC2	△
					W/	0.2kW	GYB201D5-HC2-B	△
						0.4kW	GYB401D5-HC2-B	△
						0.75kW	GYB751D5-HC2-B	△
GYH motor (middle inertia)	200V	2000r/min	without oil seal / with key, tapped	20bit INC	W/o	1.0kW	GYH102C6-TC2	◎
						1.5kW	GYH152C6-TC2	◎
						2.0kW	GYH202C6-TC2	◎
						3.0kW	GYH302C6-TC2	◎
						4.0kW	GYH402C6-TC2	◎
						5.5kW	GYH552C6-TC2	◎
						7.0kW	GYH702C6-TC2	◎
					W/	1.0kW	GYH102C6-TC2-B	◎
						1.5kW	GYH152C6-TC2-B	◎
						2.0kW	GYH202C6-TC2-B	◎
						3.0kW	GYH302C6-TC2-B	◎
						4.0kW	GYH402C6-TC2-B	◎
						5.5kW	GYH552C6-TC2-B	◎
						7.0kW	GYH702C6-TC2-B	◎

Note: Please contact our sales, if the models outside the above are needed.

◎: Standard △: Order-made

Servo Motor

Specifications							Type	Stock Type
Model	Voltage	Rated speed	Oil seal/shaft	Encoder	Brake	Rated output		
GYG motor (middle inertia)	200V	2000r/min	with oil seal / with key, tapped	20bit INC	W/o	0.5kW	GYG501C5-RG2	◎
						0.75kW	GYG751C5-RG2	◎
						1.0kW	GYG102C5-RG2	◎
						1.5kW	GYG152C5-RG2	◎
						2.0kW	GYG202C5-RG2	◎
					W/	0.5kW	GYG501C5-RG2-B	◎
						0.75kW	GYG751C5-RG2-B	◎
						1.0kW	GYG102C5-RG2-B	◎
						1.5kW	GYG152C5-RG2-B	◎
						2.0kW	GYG202C5-RG2-B	◎
				18bit ABS	W/o	0.5kW	GYG501C5-HG2	△
						0.75kW	GYG751C5-HG2	△
						1.0kW	GYG102C5-HG2	△
						1.5kW	GYG152C5-HG2	△
						2.0kW	GYG202C5-HG2	△
					W/	0.5kW	GYG501C5-HG2-B	△
						0.75kW	GYG751C5-HG2-B	△
						1.0kW	GYG102C5-HG2-B	△
						1.5kW	GYG152C5-HG2-B	△
						2.0kW	GYG202C5-HG2-B	△
GYS motor (ultra-low inertia)	200V	3000r/min	without oil seal / with key, tapped (* GYS motor of 0.1kW or less is not tapped.)	20bit INC	W/o	0.05kW	GYS500D5-RA2*	◎
						0.1kW	GYS101D5-RA2*	◎
						0.2kW	GYS201D5-RC2	◎
						0.4kW	GYS401D5-RC2	◎
						0.75kW	GYS751D5-RC2	◎
						1.0kW	GYS102D5-RC2	◎
						1.5kW	GYS152D5-RC2	◎
						2.0kW	GYS202D5-RC2	◎
						3.0kW	GYS302D5-RC2	◎
						4.0kW	GYS402D5-RC2	◎
						5.0kW	GYS502D5-RC2	◎
					W/	0.05kW	GYS500D5-RA2-B*	◎
						0.1kW	GYS101D5-RA2-B*	◎
						0.2kW	GYS201D5-RC2-B	◎
						0.4kW	GYS401D5-RC2-B	◎
						0.75kW	GYS751D5-RC2-B	◎
						1.0kW	GYS102D5-RC2-B	◎
						1.5kW	GYS152D5-RC2-B	◎
						2.0kW	GYS202D5-RC2-B	◎
						3.0kW	GYS302D5-RC2-B	◎
						4.0kW	GYS402D5-RC2-B	◎
						5.0kW	GYS502D5-RC2-B	◎
				18bit ABS	W/o	0.05kW	GYS500D5-HA2*	△
						0.1kW	GYS101D5-HA2*	△
						0.2kW	GYS201D5-HC2	△
						0.4kW	GYS401D5-HC2	△
						0.75kW	GYS751D5-HC2	△
						1.0kW	GYS102D5-HC2	△
						1.5kW	GYS152D5-HC2	△
						2.0kW	GYS202D5-HC2	△
						3.0kW	GYS302D5-HC2	△
						4.0kW	GYS402D5-HC2	△
						5.0kW	GYS502D5-HC2	△
					W/	0.05kW	GYS500D5-HA2-B*	△
						0.1kW	GYS101D5-HA2-B*	△
						0.2kW	GYS201D5-HC2-B	△
						0.4kW	GYS401D5-HC2-B	△
						0.75kW	GYS751D5-HC2-B	△
						1.0kW	GYS102D5-HC2-B	△
						1.5kW	GYS152D5-HC2-B	△
						2.0kW	GYS202D5-HC2-B	△
						3.0kW	GYS302D5-HC2-B	△
						4.0kW	GYS402D5-HC2-B	△
						5.0kW	GYS502D5-HC2-B	△

Note: Please contact our sales, if the models outside the above are needed.

◎: Standard △: Order-made

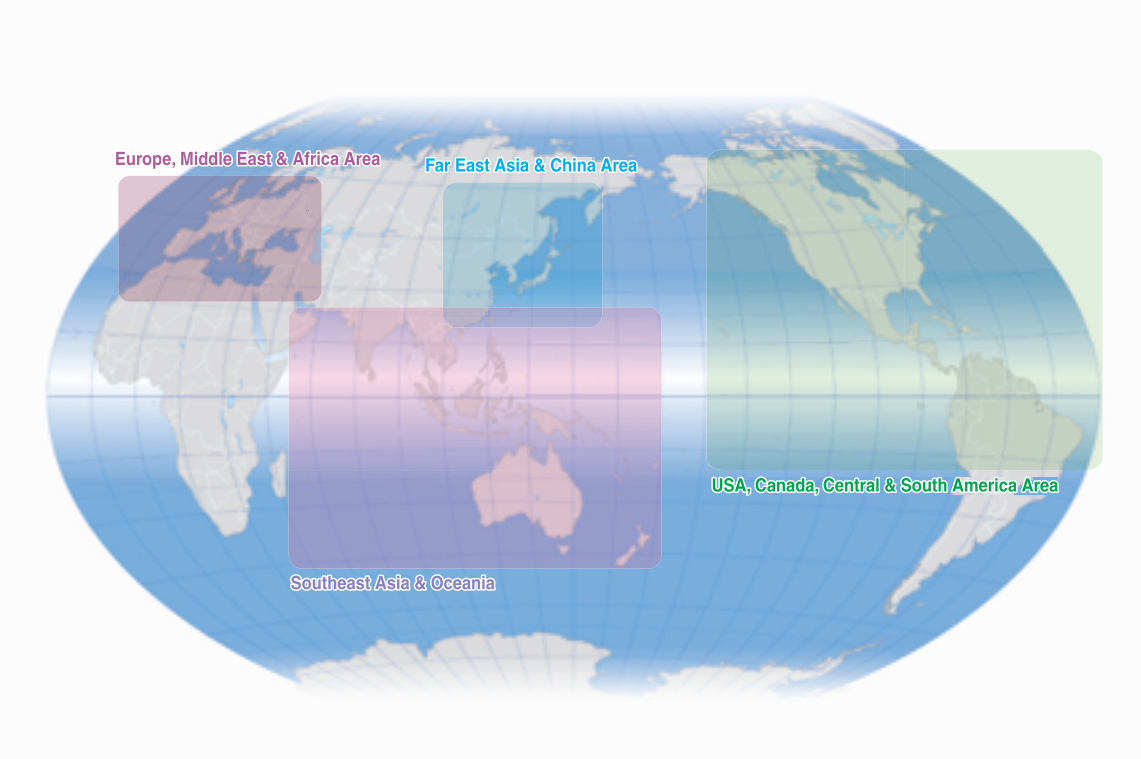

Fuji FA Service Centers

● **Far East Asia**
Overseas Service Center
Gate City Ohsaki, East Tower
11-2,Osaki 1-Chome,Shinagawa-ku
Tokyo,141-0032,Japan
Tel: +81-3-5435-7059
Fax: +81-3-5435-7447

■ Korea
- CANA ELECTRIC CO.,LTD.
  501 Ewha Bldg., 8-21, Yangjae-Dong,
  Seocho-Gu, Seoul, 137-887, Korea
  Tel:+82-2-3462-0670
  Fax:+82-2-3462-0678

■ Taiwan
- ELTA ELECTRICAL CO.,LTD.
  4F, No.32, Sec.3, Cheng-Teh Road, Taipei, Taiwan
  Tel:+886-2-2597-6458
  Fax:+886-2-2595-4571
- FULL KEY SYSTEM CO., LTD.
  12F, No.111-8, Hsing-Teh Road, San-Chung City, Taipei, Taiwan
  Tel:+886-2-2995-2008
  Fax:+886-2-2995-2028

● **Europe,Middle East & Africa Area**
EU Service Center
Goethering 58,63067 Offenbach/Main Germany
Tel: +49-69-66-90-29-0
Fax: +49-69-66-90-29-58

● **China Area**
FUJI ELECTRIC (CHINA) CO.,LTD.
Floor 29, International Corporate City,
No 3000 North Zhongshan Road
Shanghai China (P.C.200063)
Tel: +86-21-5496-1177
Fax: +86-21-6228-0350

● **Southeast Asia & Oceania**
Southeast Asia & Oceania Service Center
171 Chin Swee Road, #12-01 San Centre,
Singapore 169877
Tel: +65-6533-0014
Fax: +65-6533-0021

● **USA,Canada,Cental & South America Area**
USA Service Center
47520 Westinghouse Drive
Fremont,CA 94539,USA
Tel: +1-510-440-1060
Fax: +1-510-440-1063

Please access the URL below for further details:
http://www.fujielectric.co.jp/products/provide_data/drive/network/world/world-top.html

Please take the following items into consideration when placing your order.

When requesting an estimate and placing your orders for the products included in these materials, please be aware that any items such as specifications which are not specifically mentioned in the contract, catalog, specifications or other materials will be as mentioned below.
In addition, the products included in these materials are limited in the use they are put to and the place where they can be used, etc., and may require periodic inspection. Please confirm these points with your sales representative or directly with this company.
Furthermore, regarding purchased products and delivered products, we request that you take adequate consideration of the necessity of rapid receiving inspections and of product management and maintenance even before receiving your products.

1. Free of Charge Warranty Period and Warranty Range

1-1 Free of charge warranty period

(1) The product warranty period is "1 year from the date of purchase" or 24 months from the manufacturing date imprinted on the name place, whichever date is earlier.
(2) However, in cases where the use environment, conditions of use, use frequency and times used, etc., have an effect on product life, this warranty period may not apply.
(3) Furthermore, the warranty period for parts restored by Fuji Electric's Service Department is "6 months from the date that repairs are completed."

1-2 Warranty range

(1) In the event that breakdown occurs during the product's warranty period which is the responsibility of Fuji Electric, Fuji Electric will replace or repair the part of the product that has broken down free of charge at the place where the product was purchased or where it was delivered. However, if the following cases are applicable, the terms of this warranty may not apply.

1) The breakdown was caused by inappropriate conditions, environment, handling or use methods, etc. which are not specified in the catalog, operation manual, specifications or other relevant documents.
2) The breakdown was caused by the product other than the purchased or delivered Fuji's product.
3) The breakdown was caused by the product other than Fuji's product, such as the customer's equipment or software design, etc.
4) Concerning the Fuji's programmable products, the breakdown was caused by a program other than a program supplied by this company, or the results from using such a program.
5) The breakdown was caused by modifications or repairs affected by a party other than Fuji Electric.
6) The breakdown was caused by improper maintenance or replacement using consumables, etc. specified in the operation manual or catalog, etc.
7) The breakdown was caused by a chemical or technical problem that was not foreseen when making practical application of the product at the time it was purchased or delivered.
8) The product was not used in the manner the product was originally intended to be used.
9) The breakdown was caused by a reason which is not this company's responsibility, such as lightning or other disaster.

(2) Furthermore, the warranty specified herein shall be limited to the purchased or delivered product alone.
(3) The upper limit for the warranty range shall be as specified in item (1) above and any damages (damage to or loss of machinery or equipment, or lost profits from the same, etc.) consequent to or resulting from breakdown of the purchased or delivered product shall be excluded from coverage by this warranty.

1-3. Trouble diagnosis

As a rule, the customer is requested to carry out a preliminary trouble diagnosis. However, at the customer's request, this company or its service network can perform the trouble diagnosis on a chargeable basis. In this case, the customer is asked to assume the burden for charges levied in accordance with this company's fee schedule.

2. Exclusion of Liability for Loss of Opportunity, etc.

Regardless of whether a breakdown occurs during or after the free of charge warranty period, this company shall not be liable for any loss of opportunity, loss of profits, or damages arising from special circumstances, secondary damages, accident compensation to another company, or damages to products other than this company's products, whether foreseen or not by this company, which this company is not be responsible for causing.

3. Repair Period after Production Stop, Spare Parts Supply Period (Holding Period)

Concerning models (products) which have gone out of production, this company will perform repairs for a period of 7 years after production stop, counting from the month and year when the production stop occurs. In addition, we will continue to supply the spare parts required for repairs for a period of 7 years, counting from the month and year when the production stop occurs. However, if it is estimated that the life cycle of certain electronic and other parts is short and it will be difficult to procure or produce those parts, there may be cases where it is difficult to provide repairs or supply spare parts even within this 7-year period. For details, please confirm at our company's business office or our service office.

4. Transfer Rights

In the case of standard products which do not include settings or adjustments in an application program, the products shall be transported to and transferred to the customer and this company shall not be responsible for local adjustments or trial operation.

5. Service Contents

The cost of purchased and delivered products does not include the cost of dispatching engineers or service costs. Depending on the request, these can be discussed separately.

6. Applicable Scope of Service

Please inquiry the supplier or Fuji Electric China for details of above.

MEMO

⚠ SAFETY PRECAUTIONS

1. This catalog is intended for use in selecting required servo systems. Before actually using these products, carefully read their instruction manuals and understand their correct usage.
2. Products described in this catalog are neither designed nor manufactured for combined use with a system or equipment that will affect human lives.
   If you are considering using these products for special purposes, such as atomic energy control, aerospace, medical application, or traffic control, please consult our sales office.
3. If you use our product with equipment that is expected to cause serious injury or damage to your property in case of failure, be sure to take appropriate safety measures for the equipment.

Fuji Electric Co., Ltd.

Gate City Ohsaki, East Tower, 11-2,
Osaki 1-chome, Shinagawa-ku,
Tokyo 141-0032, Japan
Phone: +81-3-5435-7057 Fax: +81-3-5435-7420
URL: http://www.fujielectric.com/

Information in this catalog is subject to change without notice.

2013-12