CMK ELECTRO POWER PVT LTD.

Plot no.15 & 16,New Atlas Park Ind.Area,Kothariya,Nr.Ram vadi,Opp.Krishna park Hotel,Rajkot-3
Contact: +91-9510454988 / 8000617876 • Email:cmk.electro@gmail.com
GST TIN : 24091806307, CST TIN:24591806307

Complete Solution for Electrical, Electronics & Material Handling Equipments

The Festoon System C Rail & I beam

(For Round Cable/Flat Cable/Hoses Ideal use on Cranes & Hoists)

System Arranegement

Rails and Mounting Parts

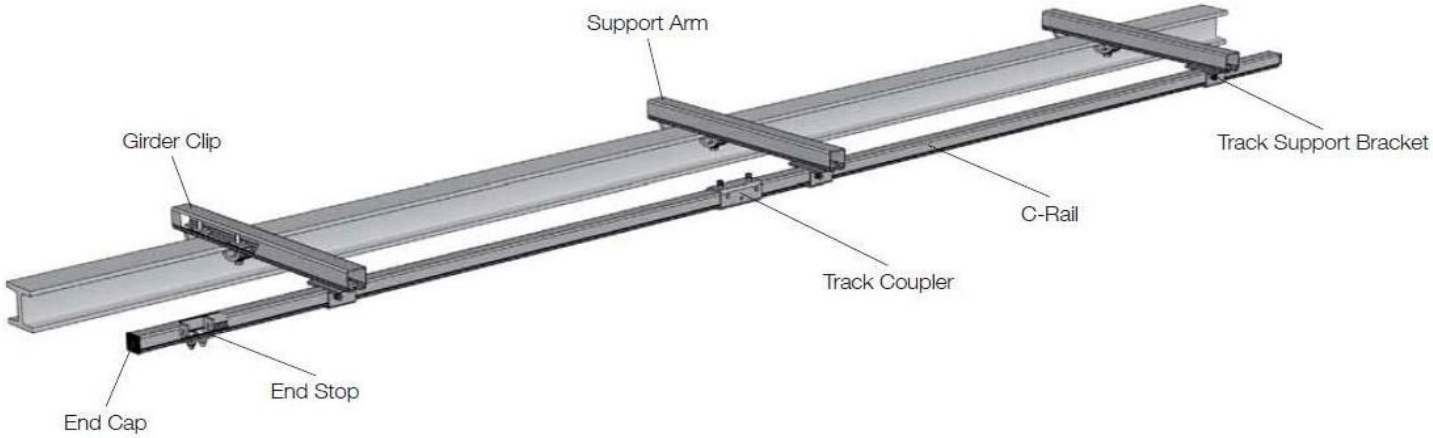

An ISO 9001:2008 Certified Company

CMK ELECTRO POWER PVT LTD.

Plot no.15 & 16,New Atlas Park Ind.Area,Kothariya,Nr.Ram vadi,Opp.Krishna park Hotel,Rajkot-3

Contact: +91-9510454988 / 8000617876 • Email:cmk.electro@gmail.com

GST TIN : 24091806307, CST TIN:24591806307

Complete Solution for Electrical, Electronics & Material Handling Equipments

FESTOON SYSTEM FOR THE FLAT CABLE

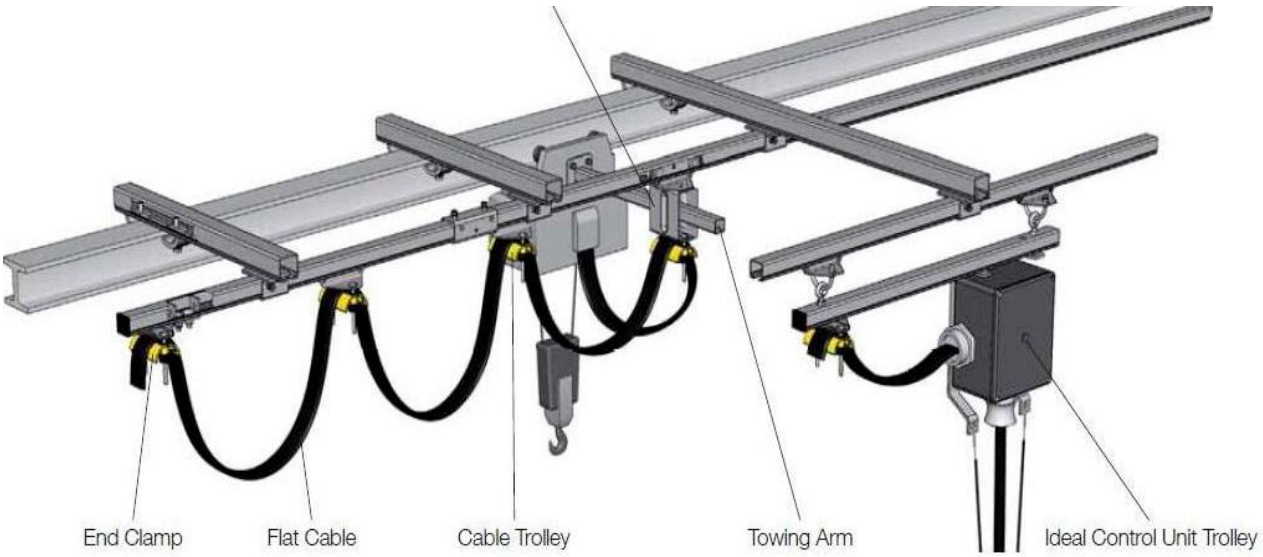

Festoon Systems for Round Cables

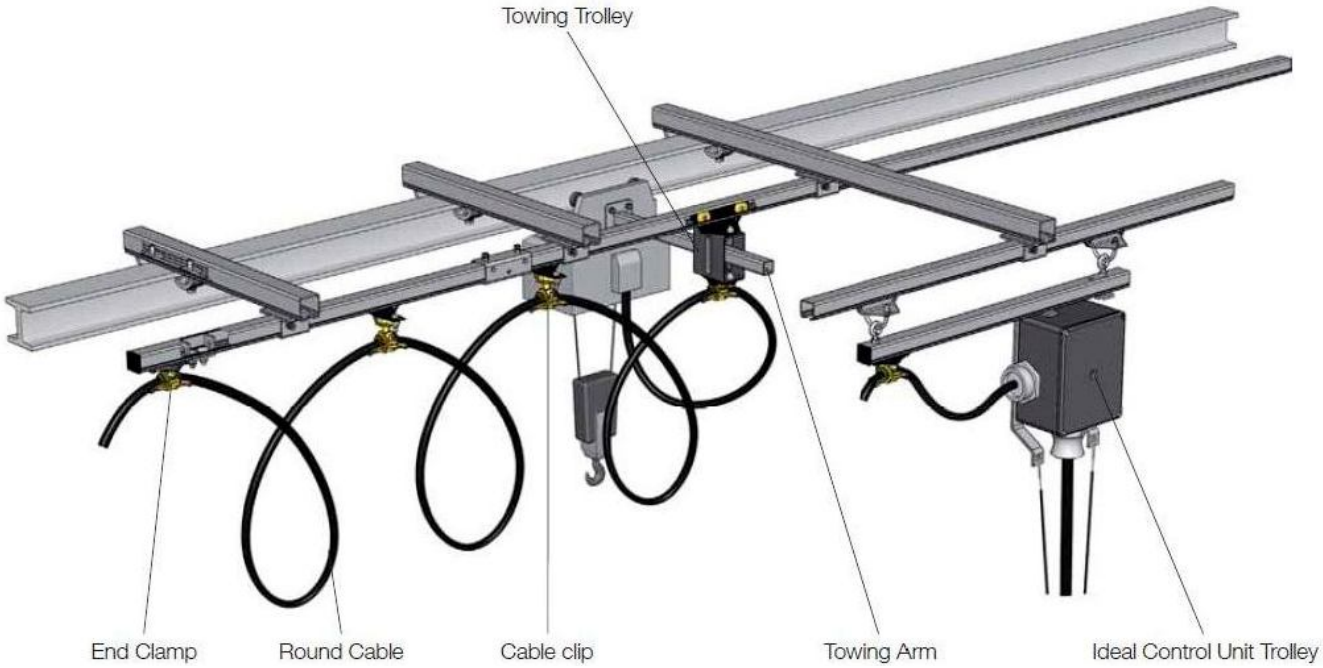

CMK ELECTRO POWER PVT LTD.

Plot no.15 & 16,New Atlas Park Ind.Area,Kothariya,Nr.Ram vadi,Opp.Krishna park Hotel,Rajkot-3

Contact: +91-9510454988 / 8000617876 • Email:cmk.electro@gmail.com

GST TIN : 24091806307, CST TIN:24591806307

Complete Solution for Electrical, Electronics & Material Handling Equipments

C-Rail and Accessories

C-Rails

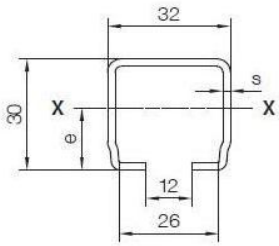

Material	Length [mm]	Thickness s [mm]	Static Values I_x [cm⁴]	W_x [cm³]	e [mm]	Weight [kg/m]
sendzimir galvanized steel	6000	2	2.42	1.45	16.70	1.56
	4000					
	6000	1.5	1.90	1.10	17.10	1.17
	4000					

Other lengths on request

Track Couplers

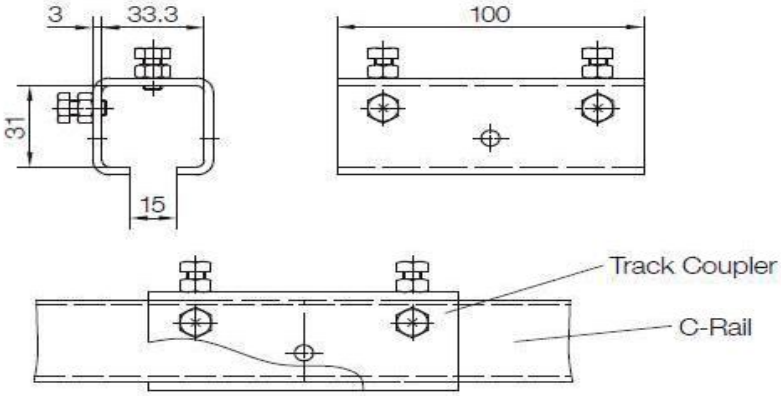

Material	Weight [kg]
galvanized steel	0.280

Note

A track coupler must be provided at each track joint.

CMK ELECTRO POWER PVT LTD.

Plot no.15 & 16,New Atlas Park Ind.Area,Kothariya,Nr.Ram vadi,Opp.Krishna park Hotel,Rajkot-3

Contact: +91-9510454988 / 8000617876 • Email:cmk.electro@gmail.com

GST TIN : 24091806307, CST TIN:24591806307

Complete Solution for Electrical, Electronics & Material Handling Equipments

Track Support Bracket

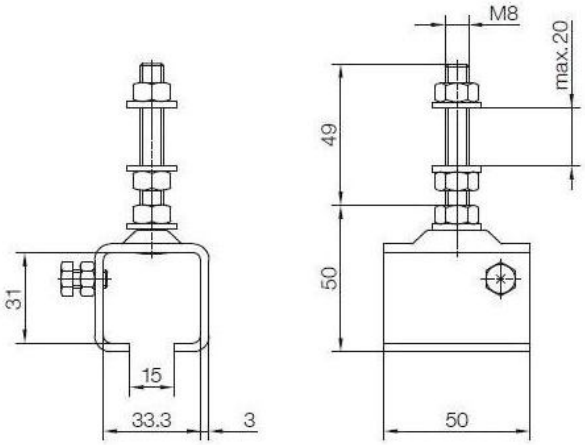

- Material: galvanized steel
- Perm. load: 63 kg
- Weight: 0.195 kg

Cable Trolleys, Light Series without Buffer

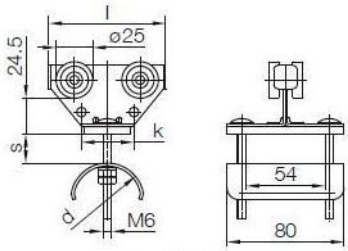

Cable Trolley

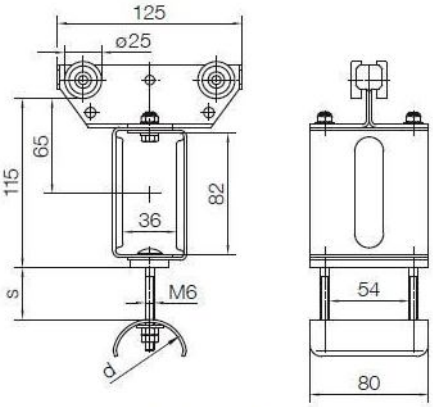

Towing Trolley

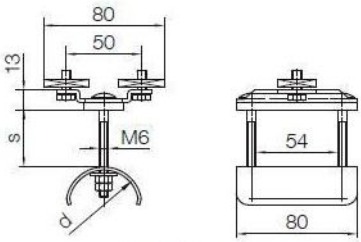

End Clamp

Technical details

- Trolley body and cable supports: galvanized steel
- Hardware: galvanized steel
- Standard rollers: ball bearing,
- Temperature range: -30°C to +80°C
- Stainless steel rollers: ball bearing,
- Temperature range stainless steel: -10°C to +80°C

d [mm]	l [mm]	s [mm]	k [mm]	Nom. Load Capacity [kg]	max. Travel Speed [m/min]
50	80	15	36	16	63
50	125	36	80		
80	125	22	80		

CMK ELECTRO POWER PVT LTD.

Plot no.15 & 16,New Atlas Park Ind.Area,Kothariya,Nr.Ram vadi,Opp.Krishna park Hotel,Rajkot-3

Contact: +91-9510454988 / 8000617876 • Email:cmk.electro@gmail.com

GST TIN : 24091806307, CST TIN:24591806307

Complete Solution for Electrical, Electronics & Material Handling Equipments

Towing Arms

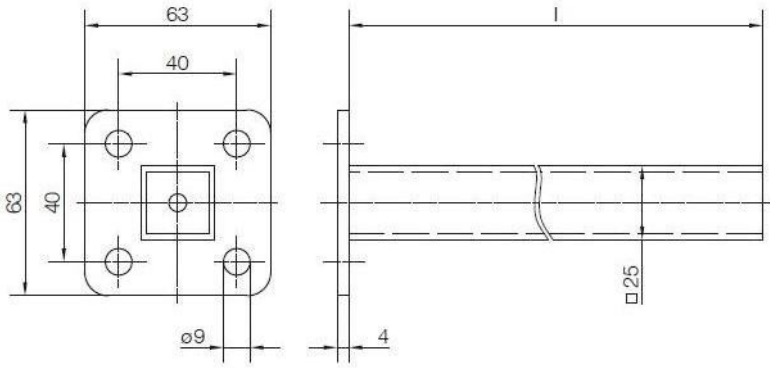

Material	l [mm]	Weight [kg]
galvanized steel	400	0.600
	630	1.000

End Stop with Rubber Buffer

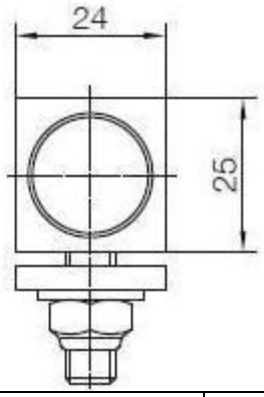

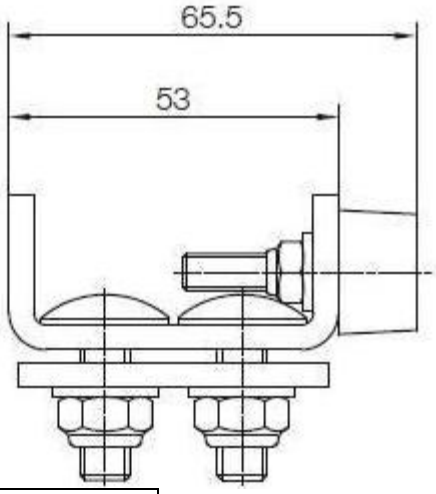

Material	Weight
Galvanized Steel	0.150 kg

CMK ELECTRO POWER PVT LTD.

Plot no.15 & 16,New Atlas Park Ind.Area,Kothariya,Nr.Ram vadi,Opp.Krishna park Hotel,Rajkot-3

Contact: +91-9510454988 / 8000617876 • Email:cmk.electro@gmail.com

GST TIN : 24091806307, CST TIN:24591806307

Complete Solution for Electrical, Electronics & Material Handling Equipments

End Stop without Rubber Buffer

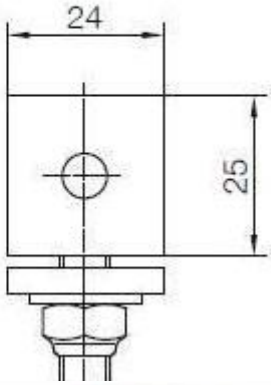

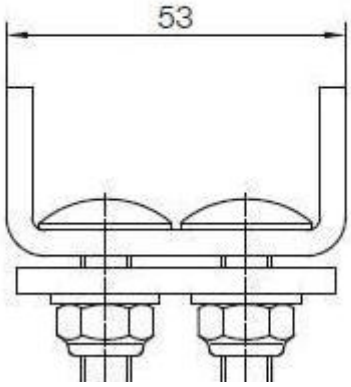

Material	Weight [kg]
galvanized steel	0.130

Application Example for End Stop Assembly

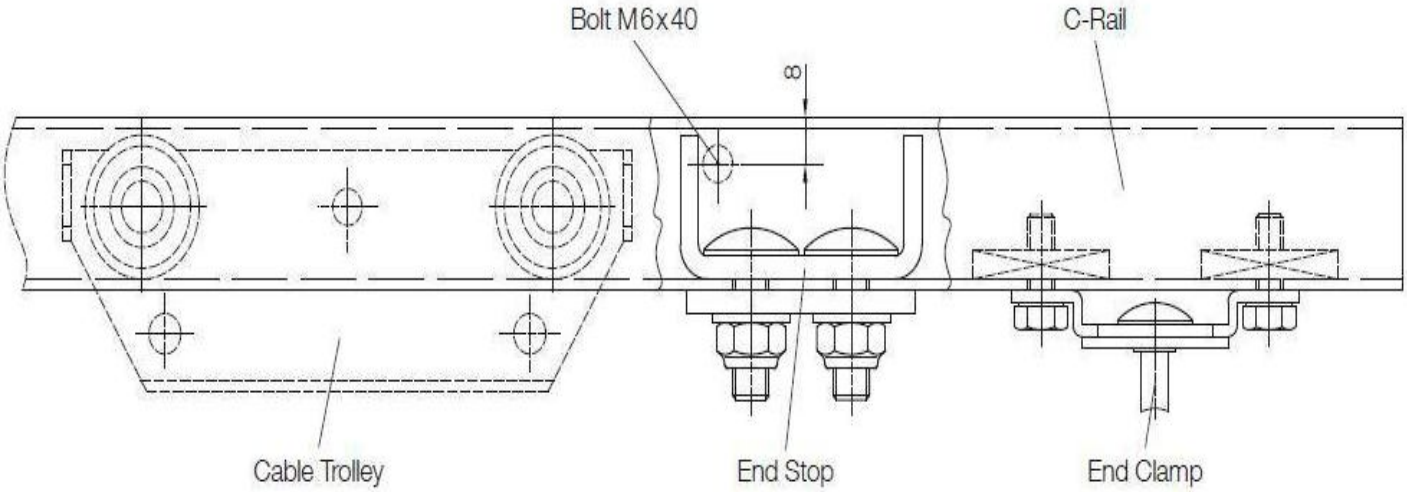

Notes

The end stop is fixed in the C-rail between the end clamp and the cable trolley.
This helps to prevent cable trolleys running into the end clamp.
For control supply systems with manually driven ideal control trolleys an end stop mounted at the end of the C-rail prevents the ideal control trolley from travelling out of the rail.

CMK ELECTRO POWER PVT LTD.

Plot no.15 & 16,New Atlas Park Ind.Area,Kothariya,Nr.Ram vadi,Opp.Krishna park Hotel,Rajkot-3

Contact: +91-9510454988 / 8000617876 • Email:cmk.electro@gmail.com

GST TIN : 24091806307, CST TIN:24591806307

Complete Solution for Electrical, Electronics & Material Handling Equipments

Technical Details:

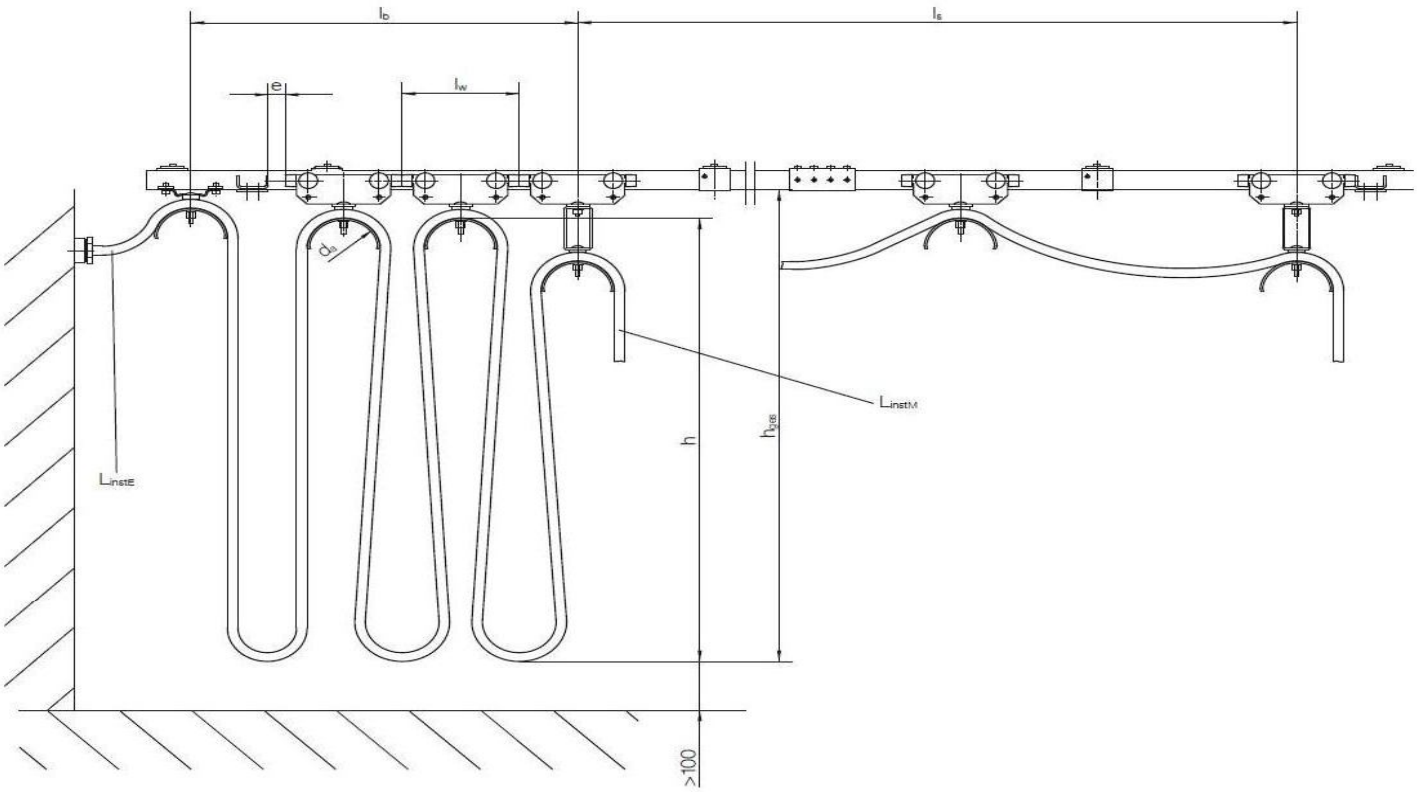

Formulas to Determine the Number of Loops, Cable Length and Loop Depth

Number of loops:

$$n = \frac{f\,(l_s + e)}{2 \cdot h + 1.25\,d_A - f \cdot l_w}$$

Storage length:

$$l_b \approx n \cdot l_w + e \quad [m]$$

System cable length:

$$L_{Syst} = f\,(l_s + l_b) \quad [m]$$

Total cable length:

$$L_{Best} = L_{Syst} + L_{instE} + L_{instM} \quad [m]$$

Loop length:

$$L_{Schl} = \frac{L_{Syst}}{n} \quad [m]$$

Loop depth:

$$h = \frac{L_{Schl}}{2} - 0.63 \cdot d_A \quad [m]$$

d_A	[m]	=	cable support diameter
e	[m]	=	free space in storage area (recommendation ≥ 0.1 m)
f		=	recommended cable factor (see table)
h	[m]	=	loop depth (measured from top edge of cable support)
h_{ges}	[m]	=	loop depth (measured from lower edge of cable support)
l_b	[m]	=	storage length incl. free space
l_s	[m]	=	travel distance
l_w	[m]	=	cable trolley length
L_{Best}	[m]	=	total cable length
L_{instE}	[m]	=	installation length, end clamp side
L_{instM}	[m]	=	installation length, towing side
L_{Schl}	[m]	=	cable length per loop
L_{Syst}	[m]	=	required cable length (measured from mid of end clamp to mid of towing trolley or towing clamp)
n		=	number of loops