STANDARDS

END CONNECTIONS	:	ANSI B 16.5/ DIN 2501/ BS 10
PRESSURE / TEMPERATURE RATINGS	:	ANSI B 16.34
ACTUATOR	:	DIAPHRAGM ACTUATOR (OPTION)
FLOW CHARACTERISTIC	:	ON / OFF

Flush Bottom Valve

FOR SLURRY AND VISCUS FLUID SERVICES

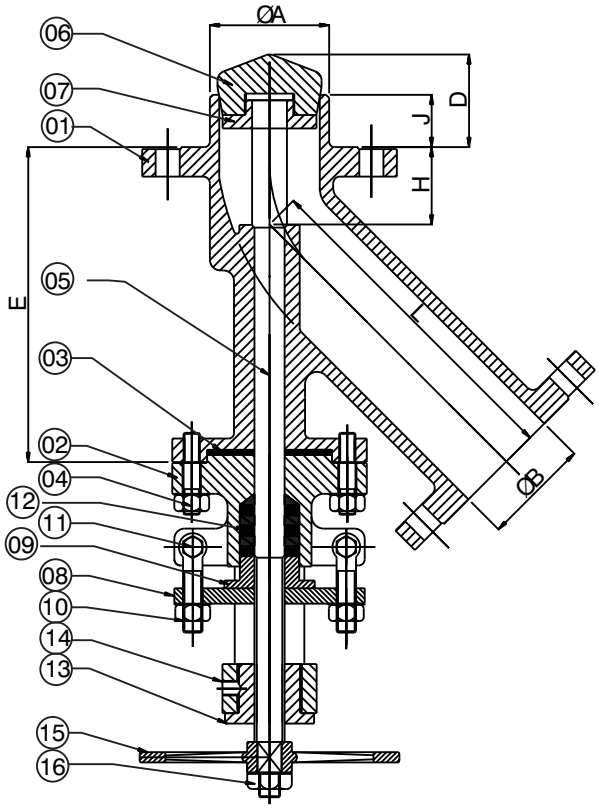

Sr.	Parts Name	Material Specifications
1	Body	ASTM A 216 GR WCB/ A 352 LCB/ A 217 WC6/ A 351 CF8/ A351 CF8M/ A 351 CF3/ A 351 CF3M
2	Bonnet	
3	Gasket	CAF - 20/59, Spiral Wound SS
		With Graphite filler
4	Nut, Stud & Washer	ASTM-A-193 Gr.B7, ASTM-A-194
		Gr.2H.
5	Spindle	AISI - 410/304/316
6	Plug.	AISI - 410/304/316
7	Plug Nut.	AISI - 410/304/316
8	Gland Flower	ASTM - A 105/304
9	Gland Bush	AISI - 410/304/316
10	Eye Bolt, Nut & Washer	ASTM-A-193 Gr.B7, ASTM-A-194 Gr.2H.
11	Crosse Bolt, Nut &	
	Washer	
12	Gland Packing	Grafoil Ring / PTFE Rope/Braided
		Asbestos / or to Suit Service
13	Yoke Bush	NI - Resist
14	Grub Screw	ASTM.A.193 6R 87/24
15	Hand Wheel	C.I. / M.I.
16	Nut & Washer For	ASTM-A-193 Gr.B7, ASTM-A-194
	Handle Wheel	Gr.2H.

Features:

- Static Pressure Of The Liquid In The Tank Acts To Increase The Contact Pressure On The Valve Seat, It Contributes To Tight Shut off.
- The Valve Body Made Of Stainless Steel Is Extremely Corrosion Resistant And Durable.
- The Soft Seating Arrangement Can Be Provided.
- The Plug/disc Can Be Removed Easily Without Removing The Valve Plug From The Body This Construction Permits Easy Replacement Of Valve Disc In A Short Time.
- The Shape Of The Flow Passage Allows To Discharge An Immense Quantity Of Liquid From A Vessel Quickly.
- The Internal Design Does Not Allow Discharged Liquid To Remain In The Valve.
- The Valve Plug is Constructed so That The Liquid Is Discharged When The Valve Stem Is Moved Upwards.

Size	25	40	50	65	80	100	125	150
CONN FLANGE IN X OUT	40X 52	50X 40	65X 50	80X 65	100X 80	125X 100	150X 125	200X 150
A	36	52	62	76	88	125	150	175
B	25	40	50	65	80	100	125	150
D	65	65	70	70	72	90	100	100
E	145	160	182	182	220	280	305	330
J	40	40	40	40	40	50	50	50
L	160	180	200	220	260	280	320	350
H	35	40	52	55	65	70	75	80
STROK (mm.)	15	20	25	25	38	38	50	50

Installation Note :
Install A Discharge Valve Vertically With The Handwheel Downwards. Do Not Install A Valve Horizontally As The Valve Stem May Derate From The Center Line, Causing Leakage Through The Valve Seat Or Gland Packing.
In Designing The Pipeline, Note That The Size Of The Inlet Connection Is Larger Than The Body Size. Design The Installation Of A Valve On A Tank, Such That The Valve Seat And The Bottom Of The Tank are On The Same Level.